ERO FÜHRUNGEN

MOVEMENT IN PRECISION

MECHANICAL AND MOTORIZED SLIDE GUIDES

WE PUT IT INTO MOTION

Certified Quality management system
DIN EN ISO 9001:2015

Copyright ERO 2020
Status April 2020
Reprint - also in excerpt - is only allowed with our authorisation. All information's in this catalog were verified with greatest care with regard to their correctness. For erroneous or incomplete indication no liability can be accepted. All details and data from former catalogs and other publications that are not conforming to this catalog lose their validity. As a progressive enterprise we are reserving the right to make changes due the technical development.

INDIVIDUAL SOLUTIONS

ERO-Führungen is your strong partner for linear motion technology. We are one of the international leading specialists for development and production of guide rails, linear slides and complete linear technology systems. Customer-specific solutions of different application and industries are our daily business.

WITH HIGHEST ACCURACY

The continuous investment in initial and continuing education of our team plus continuous renewal of machines and equipment is our basis for a constant innovation process. We use modern technologies and software to raise the quality and accuracy of our products.

PRODUCTION DEPTH & FLEXIBILITY

One of the most important factors of our constantly high flexibility and quality standard of our products and services, is the very high production depth at the head office in Unadingen. So, our own high-quality requirements are guaranteed in detail.

CORPORATE PHILOSOPHY

For over 55 years, standard- and customized solutions of ERO-Führungen are raising the success of our international customer base with their custom-made solution products. Our qualified and motivated employees use their whole knowledge with flexibility and personal engagement to meet the high requirements and wishes of our customers.

PRODUCT OVERVIEW

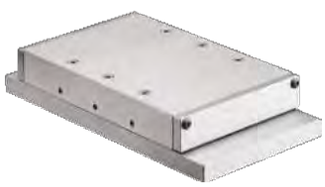

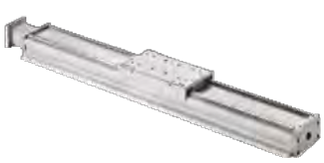
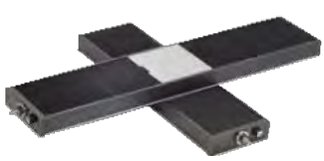

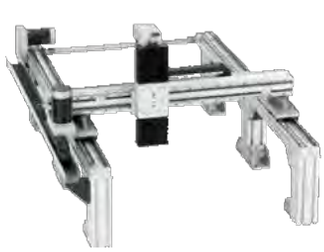

TABLE OF CONTENTS

OVERVIEW Guide Rail Page 8

TYPE R Cross Roller Guide Rail Page 12

TYPE TV Coated Guide Rail Page 16

TYPE NO Needle Roller Guide Rail Page 20

SPECIAL Customized Guide Rail Page 23

ACCESSORIES Guide Rail Page 24

OVERVIEW Profile Rail Guide Page 26

OVERVIEW	Linear Slide	Page 28
SERIES R	Linear Slide Series R	Page 30
SERIES TV	Linear Slide Series TV	Page 34
SERIES NO	Linear Slide Series NO	Page 38
SERIES S	Linear Slide Series S	Page 42
TYPE RZ TYPE TVZ TYPE NOZ	Linear Slide with Cylinder	Page 46
TYPE SZ	Linear Slide with Cylinder	Page 48
SF	Options Linear Slide	Page 50
SF	Standard Drilling Pattern	Page 58

OVERVIEW	Linear Slide	Page 62
TYPE DTA	Rotary Table	Page 63
TYPE MRT	Rotary Table	Page 64
TYPE SMH	Precision Z Stage	Page 66
TYPE RQ	XY-Stage	Page 68
TYPE SZA	Rack and Pinion Drive	Page 70
TYPE GON	Goniometer Stage	Page 72
TYPE VS	Adjustment Slide	Page 74
TYPE VS	Overview Clamps	Page 78
TYPE DTVS	Rotary Plate	Page 82
TYPE BS	Curved Guide	Page 83

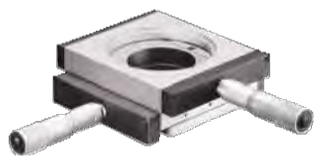

OVERVIEW	Motoric Linear Slide	Page 84
TYPE MOTS	Linear Stage	Page 86
TYPE MONO	Linear Stage	Page 87
TYPE MOKS	Linear Stage	Page 88
TYPE MOS	Linear Stage	Page 89
TYPE MOLS	Linear Stage	Page 90
TYPE MFL	Flat Linear Stage	Page 91
TYPE MML	Miniature Linear Stage	Page 92
OVERVIEW	ERO-Speed 2000/3000	Page 94
TYPE LM	Linear Module	Page 98
TYPE GM	Gripping Module	Page 99
TYPE ERM	Rotation Module	Page 99
SERIES MW	Mounting Bracket	Page 100

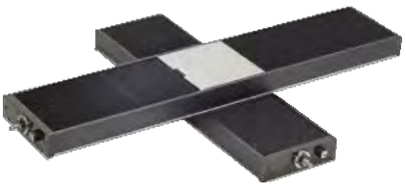

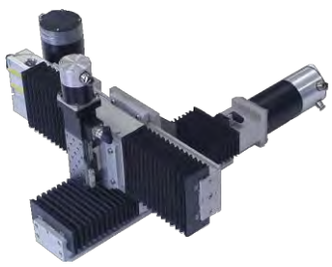

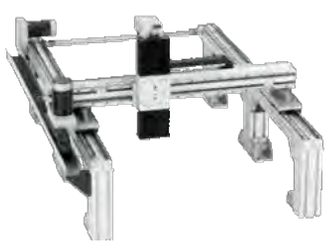

ADVANTAGES TYPE R

- Smooth running
- Coefficient of friction 0.003
- Stick-slip free run (no start-up friction)
- Minimal wear
- High load capacity
- Highest precision
- Compatible with TV and NO guides
- All standard types from stock

ADVANTAGES TYPE TV

- Very good emergency running characteristics
- Wear-resistant
- Long service life
- Very good vibration damping
- Robust against dirt and impact
- Economical
- Good absorption of lateral forces
- Compatible with R and NO guides
- All standard types from stock

ADVANTAGES TYPE NO

- Smooth running
- Coefficient of friction 0.003
- Stick-slip free run (no start-up friction)
- Minimal wear
- High load capacity
- Highest precision
- High rigidity
- Zero backlash
- Compatible with R and TV guides

CUSTOM-MADE

ERO-Führungen offers custom-made solutions for guide rails. We produce the guides at our own and so we can offer you an individual solution, for example a pattern of drilling.

If you are interested, please do not hesitate to contact us.

GENERAL

Guide rails are used for all movement-,
machining- and positioning tasks.
They are applicable horizontal and/or vertical.

Guide rails are used in different ranges.
They are among other things:

- Industrial automation
- Machine tools
- Packaging machine
- Special machine
- Measuring systems
- High precision machine
- Equipment tools
- Robots
- Aerospace
- Research project
- Semiconductor industry

ACCESSORY

Accessories for the different areas of application are for example end pieces, end screws and strippers on Page 24.

TOLERANCES OF GUIDE RAILS

The support and support surface must be exactly right-angled and should correspond to the manufacturing tolerance of the guide rail.

The preload can be 5-20% of the max. load, depending on the application. The preload reduces the load-bearing capacity of the carriage accordingly.

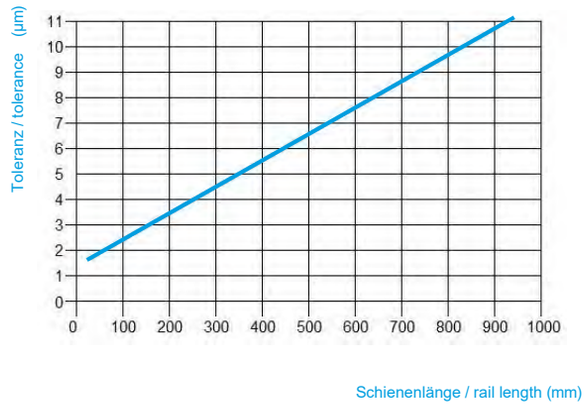

GUIDE RAILS GROUND IN THE SET

If the required total length of the guide is greater than that listed in the tables, they can be ground in the set.
In this way, precision and smoothness do not change.

On delivery of the linear guide, the guide rails are numbered accordingly so that the customer can carry out the installation correctly.

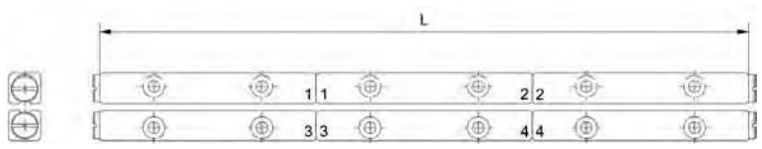

BEARING SURFACES

Type R

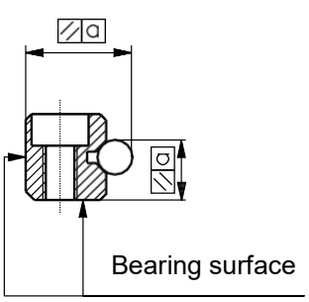

Type V and O

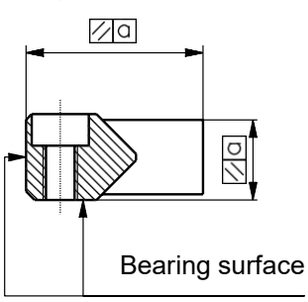

Type M and N

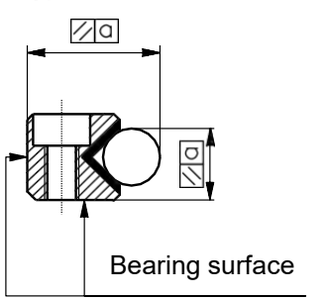

MOUNTING HOLES

As can be seen on the following pages, all guide rails are equipped with mounting holes.
This means that the guide rails can be fastened in two different ways. (See Fig. 1+2)

1

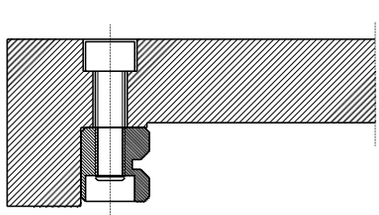

2

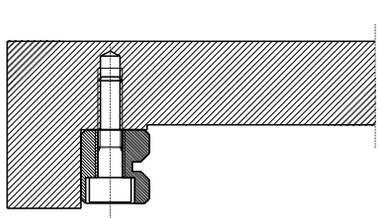

OPTIMAL CONDITIONS FOR THE INSTALLATION OF THE GUIDE RAILS

Figures 3+4 show the interior and exterior part where the R, TV and NO guide rails are normally mounted.

For correct installation, it is essential that the following conditions are given:

- The bearing surface should be ground or finely milled.
- The parallelism of the contact and support surfaces Must correspond to the guide rails. The angular errors must not exceed 0.3 µm/mm.

3

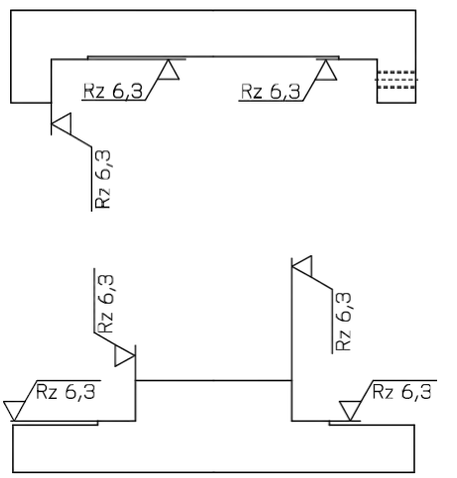

4

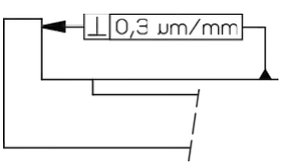

ASSEMBLY STEPS OF GUIDE RAILS

1

The fixing holes in the bearing surfaces should be be drilled after the rail holes when the guide rail is ground together. By using of special fixing screws, differences in hole spacing can be compensated for in most cases. The sides with the countersinks must not be used as a bearing surface.
Burrs from drilling are removed with a fine whetstone to achieve a perfect support of the guide rails. Before installation, the guide rails are cleaned.
They are protected against corrosion by oiling.
The fixed pair of guide rails (1) is pressed against the contact surface using a suitable clamping element and the fastening screws are tightened.
The parallelism of the fixed guide pair is checked. The measured parallelism must be within the tolerances of guide rails. Mount the fixed longitudinal guide (2).
Mount feed rail (3) and fastening screws only lightly, insert cages with rolling elements and position exactly (cage flush with rail pair in stroke end position). Mount end pieces and any wipers.
Adjust guide to be free of play (according to chapter 2) and tighten the fastening screws of the feed rail (3).

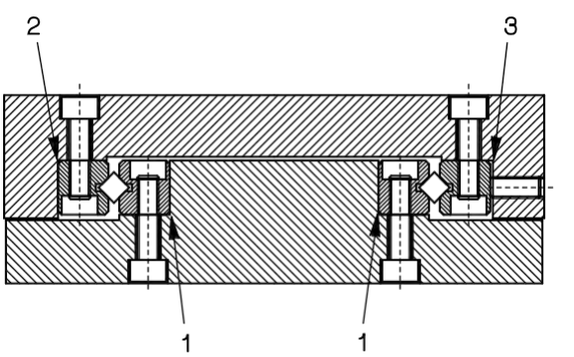

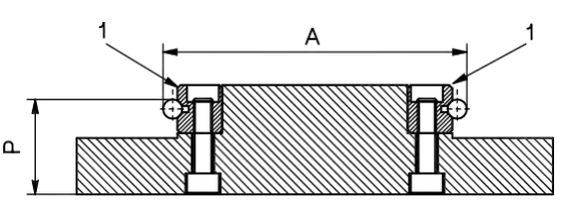

2

Backlash-free adjustment of a guideway is normally achieved by means of set screws. A backlash-free, uniform run is only achieved if adjustment is made exclusively there, where the rolling elements are located. When using set screws, one set screw must be one set screw per fastening screw of the rail. must be provided for each fastening screw of the rail.
The thread of the set screw should correspond to the guide rail.
The backlash-free adjustment of a guide can be carried out more sensitively if the dead weight is compensated by lifting.

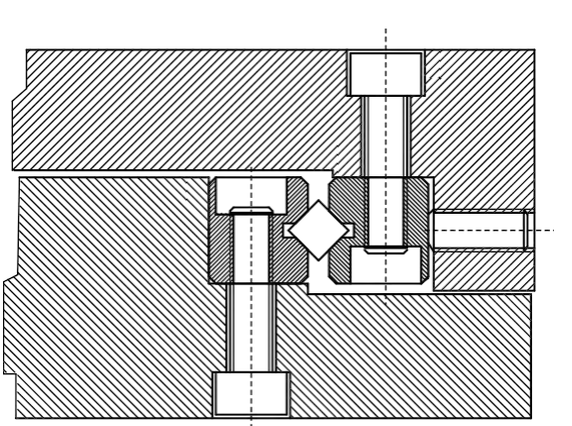

TECHNICAL DATA

Material	Tool steel (standard version)
Material hardness	60 - 62 HRC
Admissible operating temperatures	- 20°C to + 80°C (short-term +105°C)
Max. Acceleration	8 m/sec²
Max. speed	50 m/min
Min. & max. width	4 - 28 mm
Coefficient of friction	0.003
Lubrication	Rolling bearing grease based on lithium soap
Rolling elements	Roller with Ø 1.5 - 12 mm, optional balls
Sealing	Sealing against solid and liquid dirt is required, optionally available with end wipers
Special dimensions and materials	Upon request

ROLLERCAGE DESIGN

Type	Size	Installation position		Material
		Horizontal	Vertical	
H	1 - 12	✓	-	Thin steel
V	3 & 6	✓	✓	Brass
HV	6 & 9	✓	✓	Aluminium
HVK	1 - 12	✓	✓	Plastic (Standard)

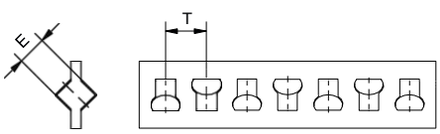

ROLLERCAGE TECHNICAL DATA

Rail size	Load [N] / Roller		Partition T			
	Dynamic	Static	H-Thin steel	V-Brass	HV-Aluminium	HVK-Plastic
1	36	58	3.0	-	-	3.0
2	54	68	4.0	-	-	4.0
3	132	160	5.0	5.0	-	5.0
6	585	680	12.0	12.0	9.0	8.5
9	1700	1830	18.0	-	14.0	14.0
12	3000	3050	22.0	-	-	16.0

GUIDE RAILS GROUND TOGETHER

If the required total length of the guide rail is greater than that listed in the tables, they can be ground in the set.
In this way, precision, smoothness, and sliding do not change.
On delivery of the linear guide, the guide rails are numbered accordingly so that the customer can carry out the installation correctly.

AREAS OF APPLICATION

- Ultrasonic welding
- Grinding machines
- Woodworking machines
- And many other

ADVANTAGES

- Smooth running
- Coefficient of friction 0.003
- Stick-slip free run (no start-up friction)
- Minimal wear
- High load capacity
- Highest precision
- Compatible with TV and NO guides
- All standard types from stock

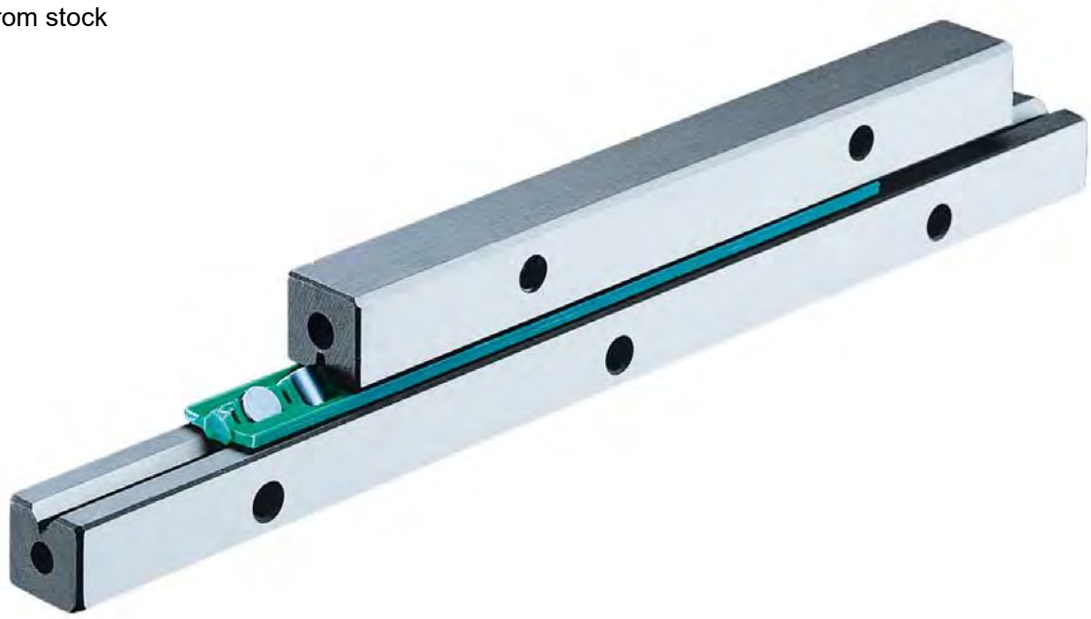

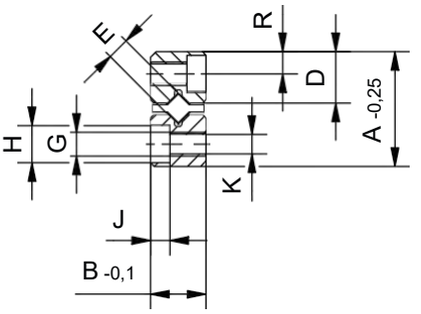

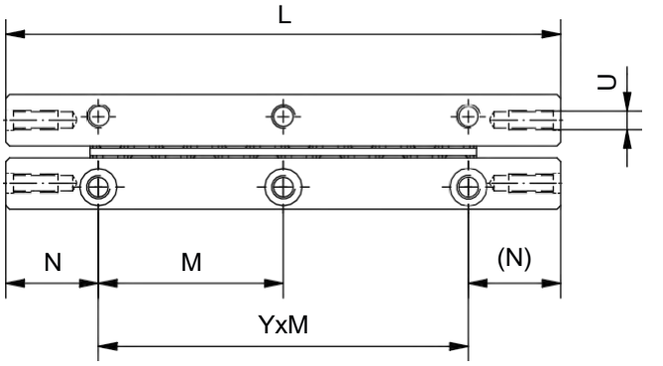

We recommend: The length of the cage
Should be at least 1,5 x guide distance a.

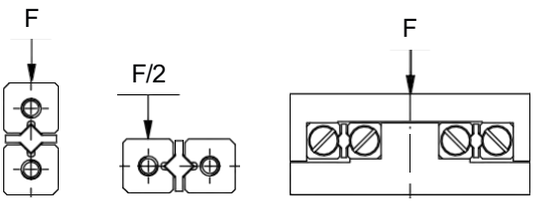

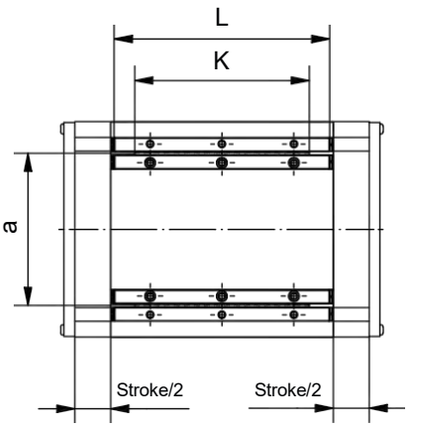

DIMENSIONING OF A GUIDE RAIL

Cage length K

$$K = \frac{F}{P} \times T$$

Rail length L

$$L = K + \frac{H}{2}$$

Rollers in cage

$$= \frac{L - \frac{L}{H}}{2} = \frac{K}{T}$$

K = Cage length

F = Force

P = Load/Roller

T = Partition

L = Rail length

H = Stroke

Example

Required:
Stroke = 150 mm
Load = 2000 N
Rollers-Ø = 3 mm

$$K = \frac{2000\ N}{100\ N} \times 5\ mm = 100\ mm$$

$$L = 100\ mm + \frac{150}{2} = 175\ mm$$

$$\text{Rollers} = \frac{100}{5} = 20\ \text{Roller}$$

ORDERING EXAMPLE

Bordering example for a complete guide rail set with 150mm stroke:

4 pieces guide rails

R3 175

Length L
Guide rail size

2 pieces roller cage

R3 HVK20

Number of roller
Cage type
Guide rail size

Calculating for orientation,
exact specifications on request

		A	B	D	E	L	N	YxM	R	G	H	J	K	U	Weight (g)
	020					20		1x10							02
	030					30		2x10							03
	040					40		3x10							04
	050					50		4x10							05
R1	060	8.5	4	3.9	1.5	60	5.0	5x10	1.8	M2	3.0	1.4	1.65	M1.6	06
	070					70		6x10							07
	080					80		7x10							08
	100					100		9x10							10
	120					120		11x10							13
	140					140		13x10							14
	030					30		1x15							06
	045					45		2x15							10
	060					60		3x15							13
	075					75		4x15							17
	090					90		5x15							20
R2	105	12.0	6	5.5	2.0	105	7.5	6x15	2.5	M3	4.4	2.1	2.55	M2.5	23
	120					120		7x15							27
	135					135		8x15							30
	150					150		9x15							33
	165					165		10x15							37
	180					180		11x15							40
	210					210		13x15							47
	050					50		1x25							023
	075					75		2x25							034
	100					100		3x25							045
	125					125		4x25							056
	150					150		5x25							067
R3	175	18.0	8	8.1	3.0	175	12.5	6x25	3.5	M4	6.0	3.2	3.3	M3	078
	200					200		7x25							089
	225					225		8x25							100
	250					250		9x25							111
	275					275		10x25							122
	300					300		11x25							133
	100					100		1x50							140
	150					150		2x50							210
	200					200		3x50							285
	250					250		4x50							355
R6	300	31.0	15	13.9	6.0	300	25.0	5x50	6.0	M6	10.0	5.2	5.3	M5	430
	350					350		6x50							500
	400					400		7x50							575
	450					450		8x50							645
	500					500		9x50							720
	600					600		11x50							865
	200					200		1x100							620
	300					300		2x100							935
	400					400		3x100							1245
	500					500		4x100							1560
R9	600	44.0	22	19.7	9.0	600	50.0	5x100	9.0	M8	11.0	6.2	6.8	M6	1875
	700					700		6x100							2185
	800					800		7x100							2500
	900					900		8x100							2815
	1000					1000		9x100							3125
	200					200		1x100							1020
	300					300		2x100							1535
	400					400		3x100							2050
	500					500		4x100							2570
R12	600	58.0	28	25.9	12.0	600	50.0	5x100	12.0	M10	15.0	8.6	8.5	M8	3085
	700					700		6x100							3600
	800					800		7x100							4120
	900					900		8x100							4635
	1000					1000		9x100							5150

Suitable end screws, end pieces and wipers can be found at **Accessories guide rails p. 25**

MATERIAL AND EXECUTION

Guide rails type TV consist of a hardened V-rail and a Turcite B or ZX-coated M-rail. The surfaces of the guide rails type V are finely ground. Guide rails type M are coated with sliding linings.
The sliding material is based on PTFE and, due to the special manufacturing process, has self-lubricating properties and excellent sliding properties.

TECHNICAL DATA

Material V-rail	Tool steel
Material M-rail	Machining steel
Material hardness	V-guide: 58 - 62 HRC M-guide: not hardened
Admissible operating temperatures	- 40°C to + 80°C
Max. speed	15 m/min
Min. & max. width	4 - 28 mm
Coefficient of friction	0.04 - 0.08 depending on the lubrication
Lubrication	Usual commercial guideway oils
Sealing	Insensitive to dirt; strippers are available
Special dimensions and materials	Upon request

GUIDE RAILS GROUND TOGETHER

If the required total length of the guide rail is greater than that listed in the tables, they can be ground in the set.
In this way, precision, smoothness, and sliding do not change.
On delivery of the linear guide, the guide rails are numbered accordingly so that the customer can carry out the installation correctly.

AREAS OF APPLICATION

- Ultrasonic welding
- Grinding machines
- Woodworking machines
- And many other

ADVANTAGES

- Very good emergency running characteristics
- Wear-resistant
- Long service life
- Very good vibration damping
- Robust against dirt and impact
- Economical
- Good absorption of lateral forces
- Compatible with R and NO guides
- All standard types from stock

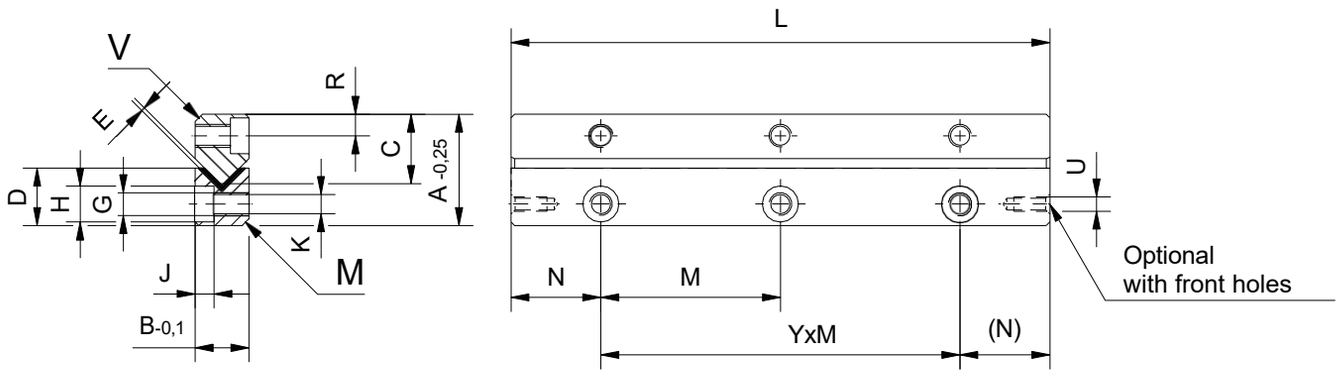

LOAD M+V GUIDE RAILS

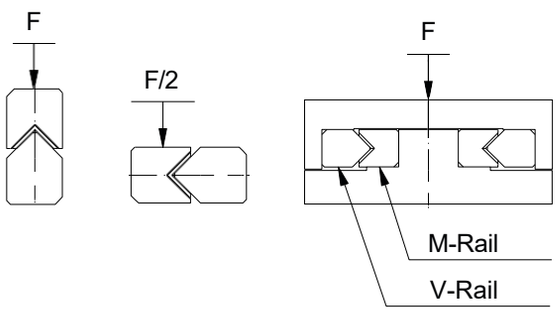

The dynamic bearing capacity is dependent on the lubricant film.
The M-rails sizes 6 - 12 can be provided with lubrication grooves.

The force specifications (table values) apply with full engagement of the rails and refer to the centre of the short rail.

They apply to area loads and as concentrated load. Please note the load direction.

DIMENSIONING OF A GUIDE RAIL

Recommendation: Length V-rail = Length M-Rail + stroke

Requirement: stroke = 100 mm
load = 200 N
size = 6
safety = 3

The minimum length of the M-Rail results from the load:
Load x safety ≤ Fzul (value from table)

→ Length 100 mm selected (M-Rail)

This results in the following for the V-rail:
Length V = Length M + Stroke
= 200 mm

ORDERING EXAMPLE

Ordering example for a complete guide rail pair with 100 mm stroke:

2 pieces guide rails

M3 125

Length L
Guide rail size

2 Piece hardened guide rails

V3 225

Length L
Guide rail size

		A	B	E	C	D	L	N	YxM	R	G	H	J	K	U	F dyn. [kN]	F stat. [kN]		Weight (g)	
																	Teflon	ZX	M-rail	V-rail
	020						20		1x10							0.05	*	*	2	2
	030						30		2x10							0.08	*	*	3	4
	040						40		3x10							0.11	*	*	4	5
	050						50		4x10							0.14	*	*	5	6
	060						60		5x10							0.16	*	*	6	8
M1 | V1	070	8.5	4	-	5.2	5	70	5.0	6x10	1.8	M2	3	1.4	1.65	-	0.19	*	*	7	9
	080						80		7x10							0.22	*	*	9	10
	090						90		8x10							0.24	*	*	10	11
	100						100		9x10							0.27	*	*	11	13
	120						120		11x10							0.33	*	*	13	15
	150						150		14x10							0.41	*	*	16	19
	030						30		1x15							0.10	0.60	2.52	6	8
	045						45		2x15							0.15	0.91	3.78	9	12
	060						60		3x15							0.20	1.21	5.04	12	15
M2 | V2	075	12.0	6	0.5	7.5	7	75	7.5	4x15	2.5	M3	4	2.1	2.55	-	0.25	1.51	6.30	15	19
	090						90		5x15							0.30	1.81	7.56	19	23
	105						105		6x15							0.35	2.12	8.82	22	27
	120						120		7x15							0.40	2.42	10.00	25	32
	150						150		9x15							0.50	3.02	12.50	31	39
	050						50		1x25							0.14	0.85	3.56	22	25
	075						75		2x25							0.21	1.28	5.34	32	39
	100						100		3x25							0.28	1.71	7.12	43	51
	125						125		4x25							0.36	2.13	8.90	54	65
	150						150		5x25							0.43	2.56	10.5	65	80
M3 | V3	175	18.0	8	0.8	10.8	9	175	12.5	6x25	3.5	M4	6	3.2	3.30	M3	0.50	2.99	12.5	76	91
	200						200		7x25							0.57	3.42	14.0	86	104
	225						225		8x25							0.64	3.84	16.0	97	117
	250						250		9x25							0.71	4.27	18.0	108	130
	275						275		10x25							0.78	4.70	19.5	119	142
	300						300		11x25							0.85	5.12	21.5	130	156
	350						350		13x25							1.00	5.98	25.0	151	182
	100						100		1x50							0.68	4.10	17.0	149	175
	150						150		2x50							1.03	6.16	25.5	218	263
	200						200		3x50							1.37	8.21	34.0	307	350
	250						250		4x50							1.71	10.5	43.0	363	438
M6 | V6	300	31.0	15	1.0	19.3	16	300	25.0	5x50	6.0	M6	10	5.2	5.30	M4	2.05	12.5	51.5	435	525
	350						350		6x50							2.39	14.5	60.0	508	613
	400						400		7x50							2.74	16.5	68.5	580	700
	450						450		8x50							3.08	18.5	77.0	653	788
	500						500		9x50							3.42	20.5	85.5	726	875
	600						600		11x50							4.10	24.5	102.5	870	1060
	200						200		1x100							2.39	14.5	60.0	640	770
	300						300		2x100							3.59	21.5	89.5	955	1156
	400						400		3x100							4.78	28.5	119.5	1270	1543
	500						500		4x100							5.98	36.0	149.5	1585	1930
M9 | V9	600	44.0	22	1.2	28	23.5	600	50.0	5x100	9.0	M8	11	6.2	6.80	M5	7.17	43.0	179.5	1900	2316
	700						700		6x100							8.37	50.0	209.0	2215	2703
	800						800		7x100							9.56	57.5	239.0	2530	3089
	900						900		8x100							11.0	64.5	269.0	2845	3476
	1000						1000		9x100							12.0	71.5	299.0	3160	3862
	200						200		1x100							2.87	17.0	71.5	1130	1224
	300						300		2x100							4.30	26.0	107.5	1690	1836
	400						400		3x100							5.74	34.5	143.5	2250	2448
	500						500		4x100							7.17	43.0	179.0	2810	3060
M12 | V12	600	58.0	28	1.5	35	32	600	50.0	5x100	12.0	M10	15	8.6	8.50	M5	8.60	51.5	215.0	3370	3672
	700						700		6x100							10.0	60.0	251.0	3930	4284
	800						800		7x100							11.5	69.0	287.0	4490	4896
	900						900		8x100							13.0	77.5	322.5	5050	5508
	1000						1000		9x100							14.5	86.0	358.5	5610	6120

* M-rails size 1 do not receive a sliding layer coating, therefore no force specifications of Turcite B or ZX coating. Static values on request.

Force values from 10 kN rounded to .0 and .5.

Suitable end screws, end pieces and wipers can be found at **accessories guide rails p. 24**

TECHNICAL DATA

Material	Tool steel (standard version)
Material hardness	60 - 62 HRC
Admissible operating temperatures	- 20°C to + 80°C (short-term +105°C)
Max. Acceleration	50 m/sec²
Max. speed	50 m/min
Min. & max. width	15 - 22 mm
Coefficient of friction	0.003
Lubrication	Rolling bearing grease based on lithium soap
Rolling elements	Roller with Ø 2 mm
Sealing	Sealing against solid and liquid dirt is required, optionally available with end wipers
Special dimensions and materials	Upon request

NEEDLE CAGE

Rail size	Load capacity [N] / pair of roller		Partition T		Installation position
	dynamic	statistic	HWA-Aluminium	HWS-Steel	
6	850	2740	4	4	horizontal & vertical
9	1180	4000	4,5	4,5	horizontal & vertical

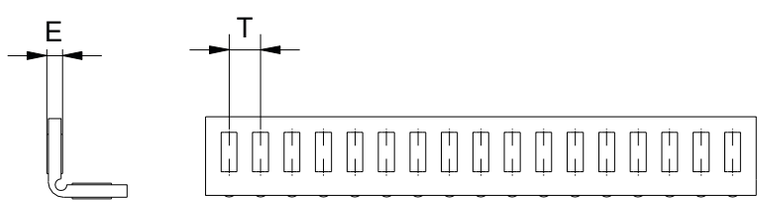

AREAS OF APPLICATION

- Processing machines
- Machine tools
- Precision engineering
- Ideally suited for short oscillating movements
- And many other

ADVANTAGES

- Smooth running
- Coefficient of friction 0.003
- Stick-slip free run (no start-up friction)
- Minimal wear
- High load capacity
- Highest precision
- High rigidity
- Zero backlash
- Compatible with R and TV guides

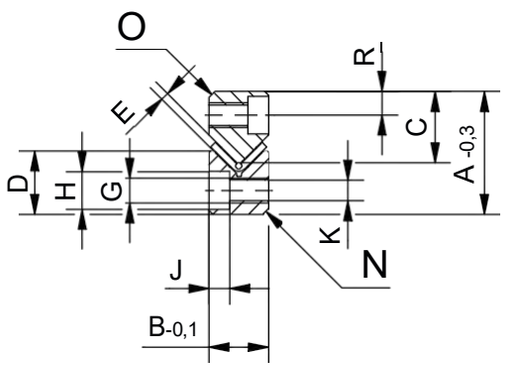

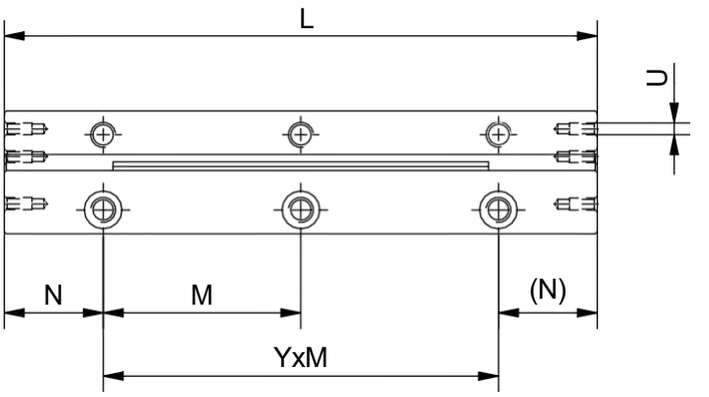

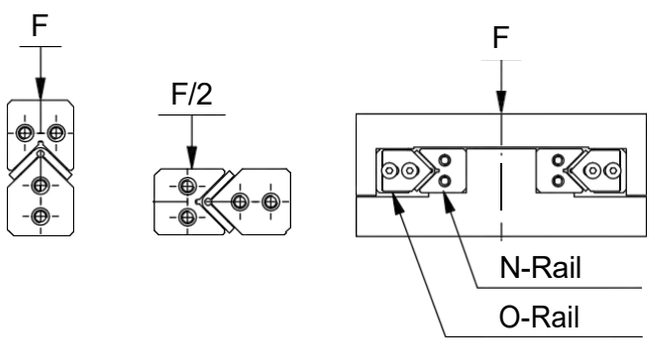

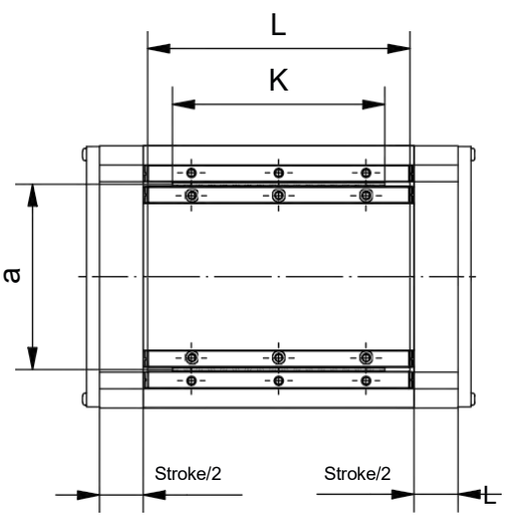

We recommend: The length of the cage
Should be at least 1,5 x guide distance a.

DIMENSIONING OF A GUIDE RAIL

Cage length K $= \frac{\text{Force F}}{\text{Load / Roller P}} \times$ Partition T

Rail length L = Cage length K + $\frac{\text{stroke H}}{2}$

Rollers in Cage $= \frac{\text{Rail length L} - 1/2\ \text{Stroke H}}{\text{Partition T}}$

or $= \frac{\text{Cage length K}}{\text{Partition T}}$

Example

Requirement: Rail length = 400 mm
Stroke = 150 mm

K = 400 mm - $\frac{150}{2}$ = 325 mm

ORDERING EXAMPLE

Ordering example for a complete guide rail set with 150 mm stroke:

2 piece N-rail

N6 400

Length L
Guide Rail size

2 piece O-rail

O6 400

Length L
Guide Rail size

2 piece needle cage

N6 HWA325

Length in mm

Calculation for orientation, exact specifications on request

		A	B	E	C	D	L	N	YxM	R	G	H	J	K	U	Weight (g)	
																N-Rail	O-Rail
	100						100		1x50							0140	0160
	150						150		2x50							0220	0240
	200						200		3x50							0290	0320
	250						250		4x50							0365	0405
	300						300		5x50							0435	0485
	350						350		6x50							0510	0570
N6 | O6	400	31	15	2	17.5	16	400	25	7x50	6	M6	9.5	5.2	5.4	M3	0580	0650
	450						450		8x50							0655	0730
	500						500		9x50							0730	0810
	600						600		11x50							0875	0965
	700						700		13x50							1030	1130
	800						800		15x50							1175	1290
	900						900		17x50							1320	1450
	1000						1000		19x50							1470	1610
	200						200		1x100							0675	0680
	300						300		2x100							1020	1030
	400						400		3x100							1355	1355
	500						500		4x100							1690	1700
N9 | O9	600	44	22	2	24.5	24	600	50	5x100	9	M8	10.5	6.2	6.8	M4	2025	2035
	700						700		6x100							2360	2375
	800						800		7x100							2700	2710
	900						900		8x100							3040	3050
	1000						1000		9x100							3375	3390

Suitable end screws, end pieces and wipers can be found at **Accessories guide rails p. 24**

CUSTOMIZED GUIDE RAILS

ERO-Führungen offers you customized solutions for guide rails.

We manufacture our rails ourselves, individual special solutions or an individual drilling pattern are no problem for us.

If we have aroused your interest, we are at your disposal at any time.

ACCESSORIES FOR TYPE TV

End pieces **Type GMA** for guide rail M with wiper made of felt for horizontal and vertical installation.

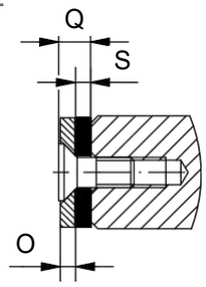

Type GMA

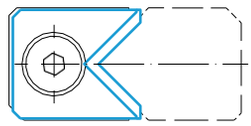

Size	Endpiece O	Wiper S	Endpiece + Wiper GMA Q
3	2.0	2.0	4.0
6	2.0	2.0	4.5
9	2.5	2.0	5.0
12	2.5	3.0	6.0

ACCESSORIES FOR TYPE NO

End pieces **Type GW** for guide rails O (optionally with wiper made of felt **Type GWA**) for horizontal and vertical installation.

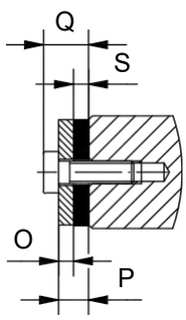

Type GW

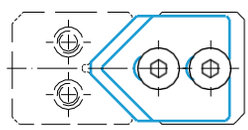

End pieces **Type GH** for guide rails N (optionally with wiper made of felt **Type GHA**) for horizontal and vertical installation.

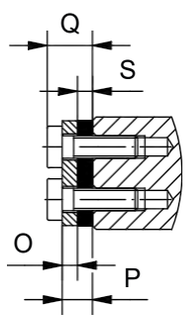

Type GH

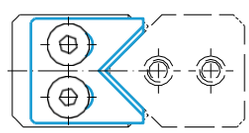

Size	Endpiece GW / GH O	Wiper S	Endpiece +wiper GWA / GHA P	Dimension Q
6	2	3	5	7
9	3	3	6	10

ACCESSORIES FOR TYPE R

End screws **Type EH** for horizontal installation

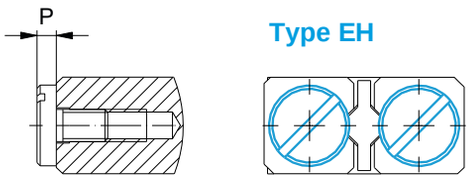

End pieces **Type EV** for horizontal and vertical installation

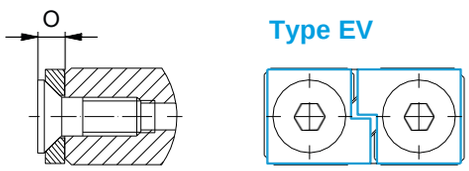

End pieces with felt wiper **Type EVA** for horizontal and vertical installation

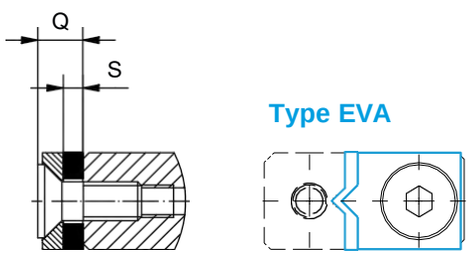

Size	End screws EH P	End piece EV O	End piece + wiper EVA Q	Wiper S
1	-	2.0	-	-
2	-	2.5	-	-
3	2.0	2.0	4.0	2.0
6	3.0	3.2	6.5	3.0
9	3.5	4.0	7.0	3.0
12	3.0	5.0	10.0	5.0

FASTENING SCREWS FOR GUIDE RAILS

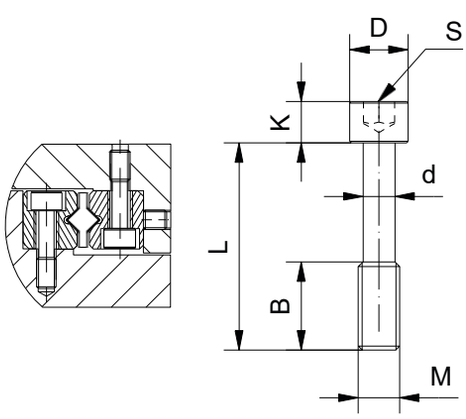

Here you will find the overview of our fastening screws **Type BS** for guide rail mounting.

Size	L	B	D	d	M	K	S
BS3	12.0	5.0	5.0	2.3	M3	3.0	2.5
BS6	20.0	8.0	8.0	3.9	M5	5.0	4.0
BS9	30.0	12.0	8.5	4.6	M6	6.0	5.0
BS12	40.0	17.0	11.3	6.2	M8	8.0	6.0

NEW IN THE PORTFOLIO

Profile rail guides with linear recirculating ball bearing and guideway assembly and short stroke ball profile rails are now available in the portfolio.

INQUIRE WITH US

Ask us for profile rail guides as well. Our portfolio is not only limited to standard profile rail guides such as ARC, HRC, ERC but also miniature also miniature linear guideways e.g., MR, wide standard linear guideways e.g., WRC and short stroke ball profile rails like ST.

Type ST = short stroke ball profile rails

Type ARC = compact design, fig. narrow carriage

Type HRC = high design, fig. flanged carriage

Type HRC = high design, fig. narrow carriage

Request more information directly from us. write to **vertrieb@ero-fuehrungen.de**

Advantages of the different Series

Series R (with cross roller guide rails)

- Long service life
- High travel speed (50m/min)
- Smooth running
- Coefficient of friction 0.003 (except RZ)
- Zero backlash
- Cross Table assembly possible
- Stick-slip free run (no start-up friction)

Series TV (with coated guide rails)

- Long service life
- Very good vibration damping
- Robust against dirt and impact
- Very good emergency running characteristics
- Cross Table assembly possible
- Economical

Series NO (needle roller guide rails)

- Smooth running
- Minimal wear
- Zero backlash
- High load capacity
- Stick-slip free run (no start-up friction)
- Compatible with R and TV-slides
- Cross table assembly possible
- High acceleration (50m/s²) + High velocity (50m/min)

Series S (dovetail design)

- Easy clearance adjustment due to conical feed rail
- Very good vibration damping
- Very good emergency running properties with coating
- Economical
- Cross Table assembly possible

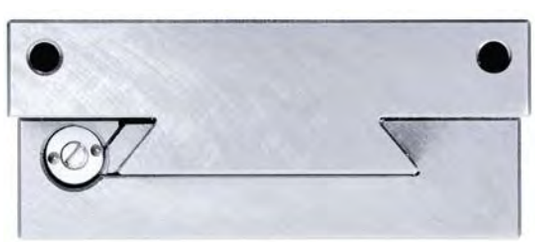

OVERVIEW OF THE DIFFERENT TYPE

All 4 series (R, NO, TV, S) are available in the following 5 types. Except S series with base plate.

RO, NOO, TVO, SO
Open design

RE, NOE, TVE, SE
Linear slide with end plate

RM, NOM, TVM, SM
Linear slide with threaded spindle

RG, NOG, TVG
Linear slide with base plate

RZ, NOZ, TVZ, SZ
Linear slide with cylinder

Options such as handwheel, pos. display or clamps can be found at **options linear slides p. 50**

TECHNICAL DATA

Material	Standard version grey cast iron EN-GJS-400-15, alternative aluminium, other materials upon request
Min. & max. width	30 - 300 mm
Coefficient of friction	0.003
Lubrication	Rolling bearing grease based on lithium soap
Rolling elements	Roller with Ø 1.5 - 9 mm
Sealing	Sealing against solid and liquid dirt is required, optionally available with end wipers
Slide execution	Surfaces ground, optionally chemically nickel-plated or natural anodized
Mounting hole	Without (standard), optionally with standard mounting holes or customer mounting holes
Spindle execution	Ground metric standard spindles, other spindles on request
Pitch accuracy	+/- 0.02 mm on 300 mm length
Maintenance	Low maintenance
Special dimensions and materials	Upon request

NOTES FOR LOADING THE SLIDE

The specified values refer to the centre of the cage, they apply to area loads and as concentrated load.
By default, no overrunning cages are used. These are calculated values.
Deflection of the carriage parts is to be expected with the specified loads.
Please observe the load direction.

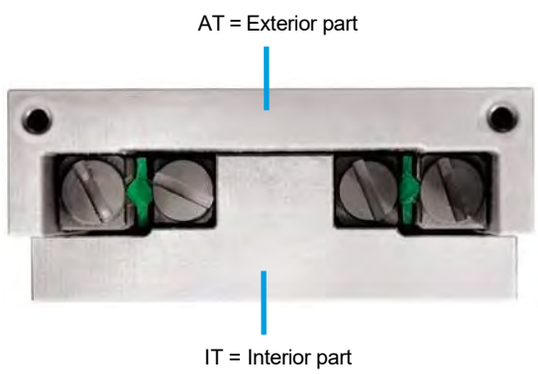

AREAS OF APPLICATION

Positioning, moving, and machining tasks as well as
Coordinate tables of any kind. Horizontal design (standard), vertical design (please note when ordering).

ADVANTAGES SERIES R

- Long service life
- High travel speed (50m/min)
- Smooth running
- Coefficient of friction < 0,003 (excerpt RZ)
- Zero backlash
- Cross Table assembly possible
- Stick-slip free run (no start-up friction)
- Highest precision
- Economical

Type RO = open design (slide parts of equal length)

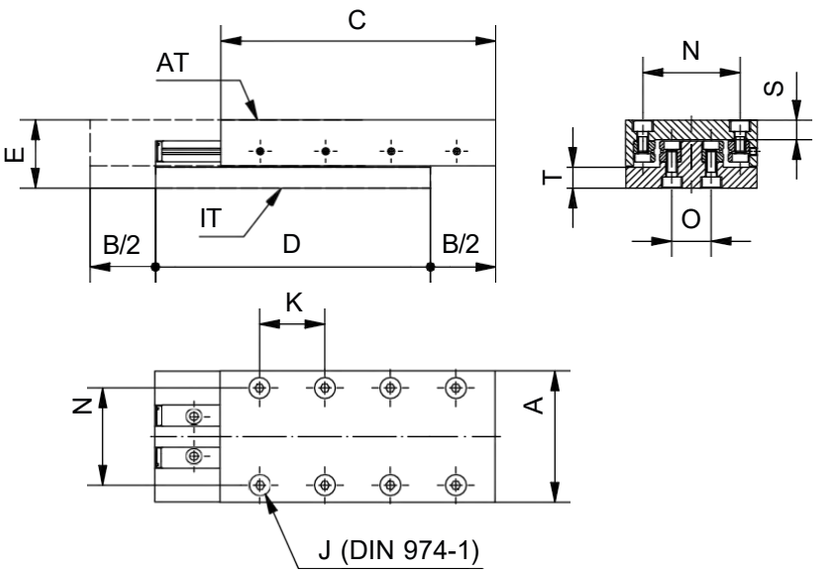

Ordering example:

RO 100.160.050

Stoke B
Length D
Width A

Standard drilling pattern page 58.
All external surfaces ground. Customized drilling pattern available on request.
Other length and width dimensions available on request. We will be pleased to advise you. T-slots on page 56.

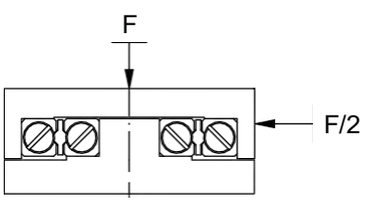

Type		A Width	C Length AT	B Stroke	D Length IT	E Height	J	K	N	O	S	T	F dyn. [N]	Weight (kg)	Rail size
30															
	30.025.010		25	10	25								72	0.1	
	30.035.020		35	20	35								108	0.1	
RO	30.045.030	30	45	30	45	17	M2	10	20.4	10.6	5.5	6.0	126	0.2	R1
	30.065.040		65	40	65								216	0.2	
	30.085.050		85	50	85								306	0.3	
50															
	50.080.025		80	25	80								792	0.7	
	50.105.050		105	50	105								924	0.9	
RO	50.105.075	50	105	75	105	26	M4	25	37.0	15.0	7.5	8.0	792	0.9	R3
	50.130.100		130	100	130								924	1.1	
75															
	75.080.025		80	25	80								792	1.3	
	75.105.050		105	50	105								924	1.7	
RO	75.130.075	75	130	75	130	32	M4	25	52.0	30.0	10.0	12.0	1122	2.1	R3
	75.155.100		155	100	155								1254	2.5	
	75.155.125		155	125	155								1122	2.5	
	75.155.150		155	150	155								924	2.5	
100															
	100.110.025		110	25	110								2925	3.1	
	100.160.050		160	50	160								4095	4.5	
RO	100.210.100	100	210	100	210	42	M6	50	74.0	36.0	11.5	13.5	4973	6.0	R6
	100.260.150		260	150	260								5850	7.4	
	100.310.200		310	200	310								6728	8.8	
150															
	150.160.050		160	50	160								4388	8.6	
	150.210.100		210	100	210								4973	11.3	
RO	150.310.150	150	310	150	310	52	M6	50	108.0	70.0	17.5	17.5	7605	16.7	R6
	150.310.200		310	200	310								6728	16.7	
	150.460.250		460	250	460								10823	24.7	
200															
	200.210.050		210	50	210								10200	17.0	
	200.310.100		310	100	310								14450	25.0	
RO	200.310.200	200	310	200	310	58	M8	100	146.0	94.0	17.0	16.5	11050	25.0	R9
	200.410.300		410	300	410								14450	32.5	
	200.410.400		410	400	410								11050	32.5	
	200.510.500		510	500	510								14450	40.5	
300															
	300.310.100		310	100	310								14450	46.5	
	300.410.200		410	200	410								17850	61.5	
RO	300.410.300	300	410	300	410	72	M8	100	238.0	186.0	23.0	23.5	14450	61.5	R9
	300.410.400		410	400	410								11050	61.5	
	300.510.500		510	500	510								14450	76.5	

Weights from size 200 rounded to the nearest 0.5 kg. Notes on the load data on page 60.

Type RE = with end plates

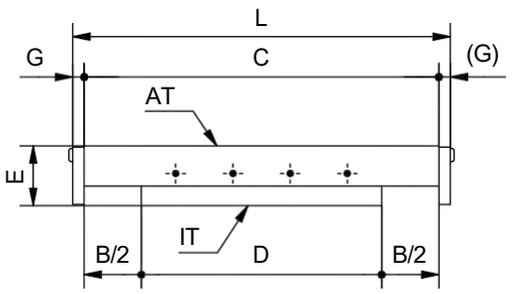

Type RM = with threaded spindle

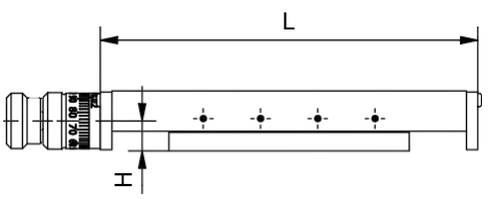

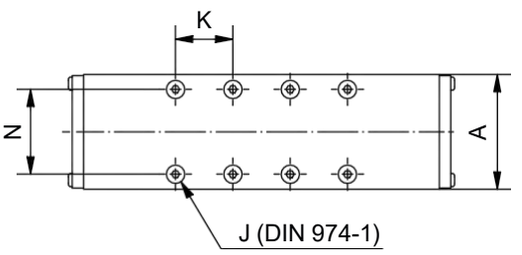

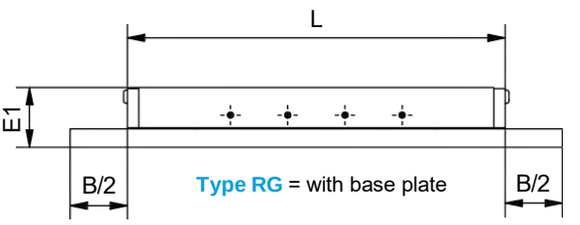

Type RG = with base plate

Type		A Width	C Length AT	B Stroke	D Length IT	E Height	E1 Height RG	L	G	H RM	J
30											
RE | RM	30.035.010		35	10	25		-	41			
RE | RM	30.055.020		55	20	35		-	61			
RE | RM	30.075.030	30	75	30	45	17	-	81	3	8.5	M2
RE | RM	30.105.040		105	40	65		-	111			
RE | RM	30.135.050		135	50	85		-	141			
50											
RE | RM | RG	50.105.025		105	25	80		26	115			
RE | RM | RG	50.155.050		155	50	105		26	165			
RE | RM | RG	50.180.075	50	180	75	105	26	26	190	5	13.0	M4
RE | RM | RG	50.230.100		230	100	130		26	240			
75											
RE | RM | RG	75.105.025		105	25	80		32	117			
RE | RM | RG	75.155.050		155	50	105		32	167			
RE | RM | RG	75.205.075	75	205	75	130	32	32	217	6	16.0	M4
RE | RM | RG	75.255.100		255	100	155		32	267			
RE | RM | RG	75.280.125		280	125	155		32	292			
RE | RM | RG	75.305.150		305	150	155		32	317			
100											
RE | RM | RG	100.135.025		135	25	110		42	151			
RE | RM | RG	100.210.050		210	50	160		42	226			
RE | RM	100.310.100	100	310	100	210	42	-	326	8	21.0	M6
RE | RM	100.410.150		410	150	260		-	426			
RE | RM | RG	100.510.200		510	200	310		42	526			
150											
RE | RM | RG	150.185.025		185	25	160		52	205			
RE | RM | RG	150.210.050		210	50	160		52	230			
RE | RM | RG	150.235.075		235	75	160		52	255			
RE | RM | RG	150.310.100	150	310	100	210	52	52	330	10	26.0	M6
RE | RM | RG	150.460.150		460	150	310		52	480			
RE | RM | RG	150.510.200		510	200	310		52	530			
RE | RM	150.710.250		710	250	460		-	730			
200											
RE | RM | RG	200.260.050		260	50	210		73	284			
RE | RM | RG	200.410.100		410	100	310		73	434			
RE | RM | RG	200.610.200	200	610	200	410	58	73	634	12	29.0	M8
RE | RM | RG	200.710.300		710	300	410		73	734			
RE | RM | RG	200.810.400		810	400	410		73	834			
RE | RM	200.1010.500		1010	500	510		-	1034			
300											
RE | RM	300.410.100		410	100	310		-	440			
RE | RM	300.610.200		610	200	410		-	640			
RE | RM	300.710.300	300	710	300	410	72	-	740	15	36.0	M8
RE | RM	300.810.400		810	400	410		-	840			
RE | RM	300.1010.500		1010	500	510		-	1040			
RE | RM	300.1210.600		1210	600	610		-	1240			

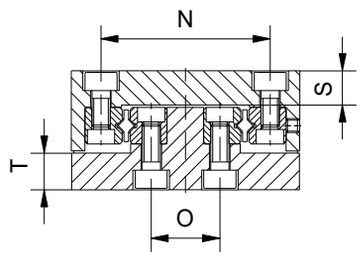

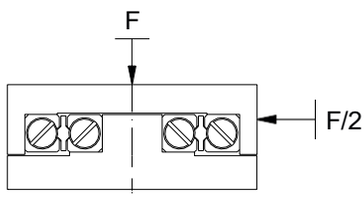

Ordering example:
RE 100.210.050

- 100 – Width A
- 210 – Length C
- 050 – Stoke B

Standard drilling pattern page 58.
All external surfaces ground.
Customized drilling pattern available on request. Other length and width dimensions on request.
We will be pleased to advise you.
T-slots on page 56.

K	N	O	S	T	Spindle	F dyn. [N]	Weight (kg)			Rail size	Reading-accuracy
							RE	*RM	RG		
30											
						72	0.1	0.1	-		
						108	0.2	0.2	-		
10	20.4	10.6	5.5	6.0	M3x0.5	126	0.2	0.2	-	R1	0.01
						216	0.3	0.3	-		
						306	0.4	0.4	-		
50											
						792	0.9	0.9	1.0		
						924	1.2	1.2	1.5		
25	37.0	15.0	7.5	8.0	M6x1	792	1.3	1.3	1.7	R3	0.02
						924	1.5	1.6	2.1		
75											
						792	1.7	1.8	2.0		
						924	2.3	2.4	2.9		
25	52.0	30.0	10.0	12.0	M8x1	1122	2.9	2.9	3.8	R3	0.01
						1254	3.4	3.5	4.7		
						1122	3.6	3.6	5.2		
						924	3.8	3.8	5.7		
100											
						2925	3.9	4.0	4.4		
						4095	5.6	5.6	6.5		
50	74.0	36.0	11.5	13.5	M12x1	4973	7.5	7.6	-	R6	0.01
						5850	9.5	9.5	-		
						6728	11.4	11.4	15.3		
150											
						4388	10.5	10.6	11.4		
						4095	11.0	11.2	12.9		
						3510	11.6	11.8	14.4		
50	108.0	70.0	17.5	17.5	M16x1	4973	14.8	15.1	18.6	R6	0.01
						7605	21.4	21.4	27.1		
						6728	22.5	22.6	30.1		
						10823	31.9	31.8	-		
200											
						10200	20.5	21.0	28.0		
						14450	30.0	30.5	42.0		
100	146.0	94.0	17.0	16.5	M20x2	17850	41.5	41.0	58.0	R9	0.02
						14450	44.5	44.0	68.5		
						11050	47.5	47.5	76.0		
						14450	59.0	58.5	-		
300											
						14450	57.5	58.5	-		
						17850	78.5	78.5	-		
100	238.0	186.0	23.0	23.5	M20x2	14450	84.5	84.5	-	R9	0.02
						11050	90.0	90.5	-		
						14450	111.0	111.5	-		
						17850	132.0	132.0	-		

Weights from size 200 rounded to the nearest 0.5 kg. Notes on the load data on page 60.
* RM Weight with micrometer screw

TECHNICAL DATA

Material	Standard version grey cast iron EN-GJS-400-15, alternative aluminium, other materials upon request
Min. & max. width	30 - 300 mm
Coefficient of friction	0.04 - 0.08 (depending on the lubrication)
Lubrication	Usual commercial guideway oils
Sealing	Insensitive to dirt, optionally available with end wipers in case of heavy dirt, wipers on all sides also possible
Slide execution	Surfaces ground, optionally chemically nickel-plated or natural anodized
Mounting hole	Without (standard), optionally with standard mounting holes or customer mounting holes
Spindle execution	Ground metric standard spindles, other spindles on request
Pitch accuracy	+/- 0.02 mm on 300 mm length
Maintenance	Low maintenance
Special dimensions and materials	Upon request

NOTES FOR LOADING THE SLIDE

These are calculated values.
The values given refer to the centre in the short slide part
They are valid for area loads and as individual loads.
Deflection of the slide parts is to be expected at the specified loads.
Please observe the load direction.

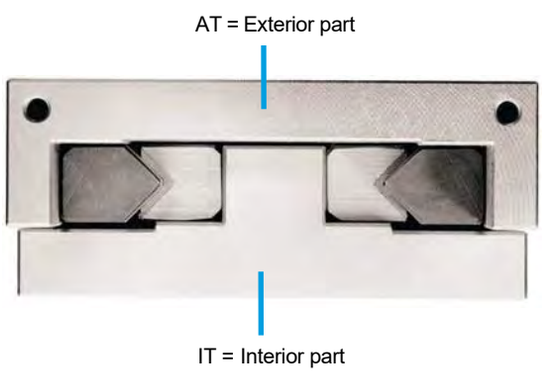

AREAS OF APPLICATION

Positioning, moving, and machining tasks as well as coordinate tables of any kind. Can be used horizontally or vertically.

ADVANTAGES SERIES TV

- Smooth running
- Very good emergency running characteristics
- Wear-resistant
- Robust against dirt and impact
- Long service life
- Very good vibration damping
- Economical
- Good absorption of lateral forces
- Cross table assembly possible

Type TVO = open design (slide parts of equal length)

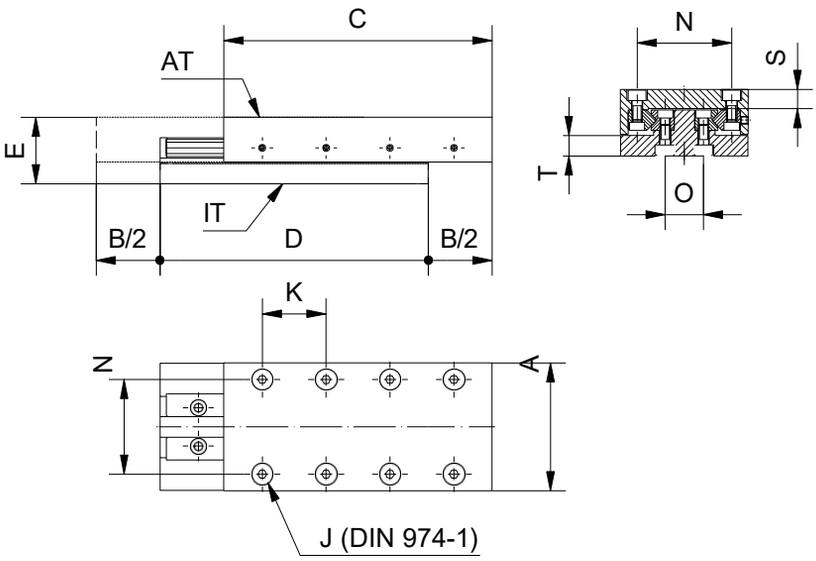

Ordering example:

TVO 100.160.050

Stroke B
Length D
Width A

Standard drilling pattern page 58. All external surfaces ground.
Customized drilling pattern available on request. Other length and width dimensions on request. We will be pleased to advise you.

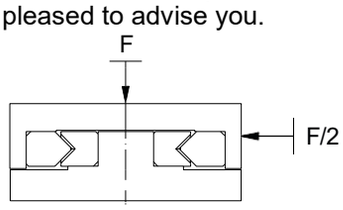

Type		A Width	C Length AT	B Stroke	D Length IT	E Height	J	K	N	O	S	T	F dyn. [N]	Weight (kg)	Rail size
30															
	30.025.010		25	10	25								34	0.1	
	30.035.020		35	20	35								51	0.1	
TVO	30.045.030	30	45	30	45	17	M2	10	20.4	10.6	5.5	6.0	68	0.2	M1 | V1
	30.065.040		65	40	65								102	0.2	
	30.085.050		85	50	85								136	0.3	
50															
	50.080.025		80	25	80								133	0.7	
	50.105.050		105	50	105								178	0.9	
TVO	50.105.075	50	105	75	105	26	M4	25	37.0	15.0	7.5	8.0	178	0.9	M3 | V3
	50.130.100		130	100	130								222	1.1	
75															
	75.080.025		80	25	80								133	1.3	
	75.105.050		105	50	105								178	1.7	
TVO	75.130.075	75	130	75	130	32	M4	25	52.0	30.0	10.0	12.0	222	2.1	M3 | V3
	75.155.100		155	100	155								267	2.5	
	75.155.125		155	125	155								267	2.5	
	75.155.150		155	150	155								267	2.5	
100															
	100.110.025		110	25	110								428	3.0	
	100.160.050		160	50	160								641	4.5	
TVO	100.210.100	100	210	100	210	42	M6	50	74.0	36.0	11.5	13.5	855	6.0	M6 | V6
	100.260.150		260	150	260								1069	7.5	
	100.310.200		310	200	310								1283	9.0	
150															
	150.160.050		160	50	160								641	8.5	
	150.210.100		210	100	210								855	11.0	
TVO	150.310.150	150	310	150	310	52	M6	50	108.0	70.0	17.5	17.5	1283	16.5	M6 | V6
	150.310.200		310	200	310								1283	16.5	
	150.460.250		460	250	460								1924	25.0	
200															
	200.210.050		210	50	210								1500	17.0	
	200.310.100		310	100	310								2250	25.0	
	200.310.200		310	200	310								2250	25.0	
TVO	200.410.300	200	410	300	410	58	M8	100	146.0	94.0	17.0	16.5	3000	33.0	M9 | V9
	200.410.400		410	400	410								3000	33.0	
	200.510.500		510	500	510								3750	41.5	
	200.610.600		610	600	610								4500	49.5	
300															
	300.310.100		310	100	310								2250	46.5	
	300.410.200		410	200	410								2300	62.0	
TVO	300.410.300	300	410	300	410	72	M8	100	238.0	186.0	23.0	23.5	2300	62.0	M9 | V9
	300.410.400		410	400	410								2300	62.0	
	300.510.500		510	500	510								3750	77.0	
	300.610.600		610	600	610								4500	92.0	

Weights from size 200 rounded to the nearest 0.5 kg. Notes on the load data on page 34.

LINEAR SLIDE TYPE TVE, TVM, TVG

Type TVE = with end plates

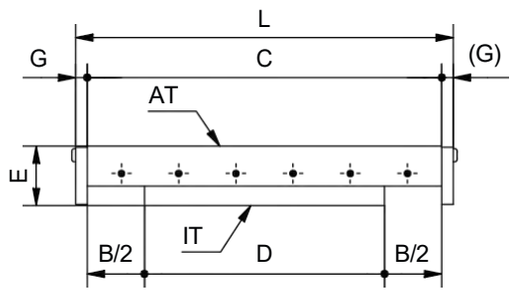

Type TVM = with threaded spindle

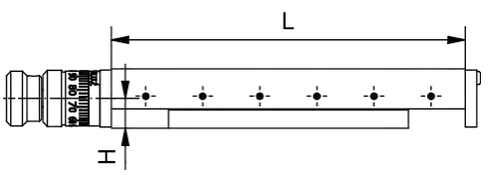

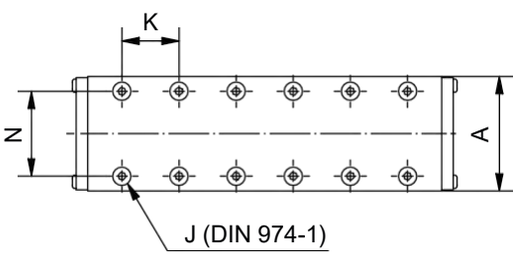

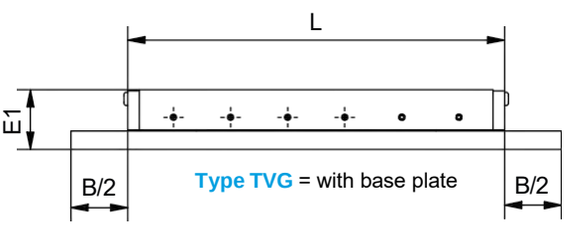

Type TVG = with base plate

Type		A Width	C Length AT	B Stroke	D Length IT	E Height	E1 Height TVG	L	G	H TVM	J
30											
TVE | TVM	30.035.010		35	10	25		-	41			
TVE | TVM	30.055.020		55	20	35		-	61			
TVE | TVM	30.075.030	30	75	30	45	17	-	81	3	8.5	M2
TVE | TVM	30.105.040		105	40	65		-	111			
TVE | TVM	30.135.050		135	50	85		-	141			
50											
TVE | TVM | TVG	50.105.025		105	25	80		26	115			
TVE | TVM | TVG	50.155.050		155	50	105		26	165			
TVE | TVM | TVG	50.180.075	50	180	75	105	26	26	190	5	13.0	M4
TVE | TVM | TVG	50.230.100		230	100	130		26	240			
75											
TVE | TVM | TVG	75.105.025		105	25	80		32	117			
TVE | TVM | TVG	75.155.050		155	50	105		32	167			
TVE | TVM | TVG	75.205.075	75	205	75	130	32	32	217	6	16.0	M4
TVE | TVM | TVG	75.255.100		255	100	155		32	267			
TVE | TVM | TVG	75.280.125		280	125	155		32	292			
TVE | TVM | TVG	75.305.150		305	150	155		32	317			
100											
TVE | TVM | TVG	100.135.025		135	25	110		42	151			
TVE | TVM | TVG	100.210.050		210	50	160		42	226			
TVE | TVM	100.310.100	100	310	100	210	42	-	326	8	21.0	M6
TVE | TVM	100.410.150		410	150	260		-	426			
TVE | TVM | TVG	100.510.200		510	200	310		42	526			
150											
TVE | TVM | TVG	150.185.025		185	25	160		52	205			
TVE | TVM | TVG	150.210.050		210	50	160		52	230			
TVE | TVM | TVG	150.235.075		235	75	160		52	255			
TVE | TVM | TVG	150.310.100	150	310	100	210	52	52	330	10	26.0	M6
TVE | TVM | TVG	150.460.150		460	150	310		52	480			
TVE | TVM | TVG	150.510.200		510	200	310		52	530			
TVE | TVM	150.710.250		710	250	460		-	730			
200											
TVE | TVM | TVG	200.260.050		260	50	210		73	284			
TVE | TVM | TVG	200.410.100		410	100	310		73	434			
TVE | TVM | TVG	200.610.200	200	610	200	410	58	73	634	12	29.0	M8
TVE | TVM | TVG	200.710.300		710	300	410		73	734			
TVE | TVM | TVG	200.810.400		810	400	410		73	834			
TVE | TVM	200.1010.500		1010	500	510		-	1034			
300											
TVE | TVM	300.410.100		410	100	310		-	440			
TVE | TVM	300.610.200		610	200	410		-	640			
TVE | TVM	300.710.300	300	710	300	410	72	-	740	15	36.0	M8
TVE | TVM	300.810.400		810	400	410		-	840			
TVE | TVM	300.1010.500		1010	500	510		-	1040			
TVE | TVM	300.1010.600		1010	600	410		-	1040			

Ordering example:
TVE 100.210.050

Stroke B
Length C
Width A

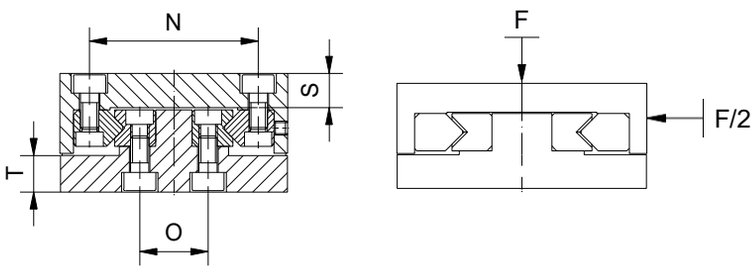

Standard drilling pattern page 58.
All external surfaces ground. Customized drilling pattern available on request.
Other length and width dimensions available on request. We will be pleased to advise you. T-slots on page 56.

K	N	O	S	T	Spindle	F dyn. [N]	Weight (kg)			Rail size	Reading-accuracy
							TVE	*TVM	TVG		
30											
						34	0.1	0.1	-		
						51	0.2	0.2	-		
10	20.4	10.6	5.5	6.0	M3x0.5	68	0.2	0.2	-	M1 | V1	0.01
						102	0.3	0.3	-		
						136	0.4	0.4	-		
50											
						133	0.9	0.9	1.0		
						178	1.2	1.3	1.5		
25	37.0	15.0	7.5	8.0	M6x1	178	1.3	1.4	1.7	M3 | V3	0.02
						222	1.6	1.6	2.2		
75											
						133	1.7	1.8	2.0		
						178	2.3	2.3	3.0		
25	52.0	30.0	10.0	12.0	M8x1	222	3.0	3.0	3.8	M3 | V3	0.01
						267	3.5	3.5	5.8		
						267	3.7	3.7	5.3		
						267	3.9	3.9	5.8		
100											
						428	4.0	4.0	4.3		
						641	5.8	5.8	6.8		
50	74.0	36.0	11.5	13.5	M12x1	855	8.0	8.0	-	M6 | V6	0.01
						1069	10.0	10.0	-		
						1283	12.2	12.0	16.0		
150											
						641	10.5	10.5	11.3		
						641	11.0	11.0	13.0		
						641	12.0	12.0	14.5		
50	108.0	70.0	17.5	17.5	M16x1	855	15.0	15.0	18.8	M6 | V6	0.01
						1283	22.0	22.0	27.5		
						1283	23.0	23.0	30.6		
						1924	32.0	32.5	-		
200											
						1500	20.5	20.5	28.5		
						2250	31.0	31.0	43.5		
100	146.0	94.0	17.0	16.5	M20x2	3000	43.0	42.0	60.5	M9 | V9	0.02
						3000	47.0	46.5	71.5		
						3000	50.5	50.5	80.0		
						3750	62.5	62.5	-		
300											
						2250	58.0	59.0	-		
						3000	80.0	80.0	-		
100	238.0	186.0	23.0	23.5	M20x2	3000	86.0	86.5	-	M9 | V9	0.02
						3000	93.0	93.0	-		
						3750	114.0	115.0	-		
						3000	106.0	107.0	-		

Weights from size 200 rounded to the nearest 0.5 kg. Notes on the load data on page 34.
* RM Weight with micrometer screw

TECHNICAL DATA

Material	Standard version grey cast iron EN-GJS-400-15, alternative aluminium, other materials upon request
Min. & max. width	100 - 300 mm
Coefficient of friction	0.003
Lubrication	Rolling bearing grease based on lithium soap
Rolling elements	Needle roller with Ø 2 mm
Sealing	Sealing against solid and liquid dirt is required, optionally available with end wipers
Slide execution	Surfaces ground, optionally chemically nickel-plated or natural anodized (aluminium)
Mounting hole	Without (standard), optionally with standard mounting holes or customer mounting holes
Spindle execution	Ground metric standard spindles, other spindles on request
Pitch accuracy	+/- 0.02 mm on 300 mm length
Maintenance	Low maintenance
Special dimensions and materials	Upon request

NOTES FOR LOADING THE SLIDE

The specified values refer to the centre of the cage, they apply to area loads and as concentrated load.
By default, no overrunning cages are used. These are calculated values.
Deflection of the carriage parts is to be expected with the specified loads
Please observe the load direction.

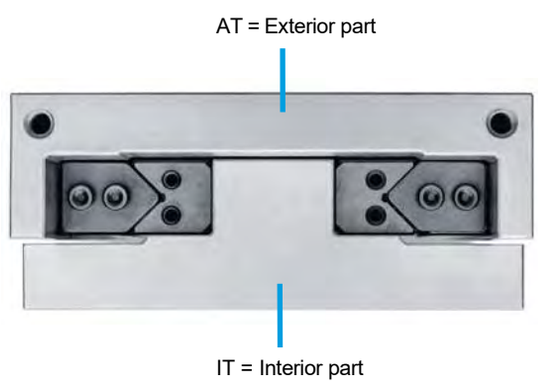

AREAS OF APPLICATION

Positioning, moving, and machining tasks as well as coordinate tables of any kind, as well as machine tools and precision machines. Horizontal design (standard), vertical design (please note when ordering).

ADVANTAGES SERIES NO

- Smooth running
- Minimal wear
- Zero backlash
- Stick-slip free run (no start-up friction)
- Compatible with R and TV-slides
- Cross Table assembly possible
- High acceleration (50m/s²)
- High velocity (50m/min)

Type NOO = open design (slide parts of equal length)

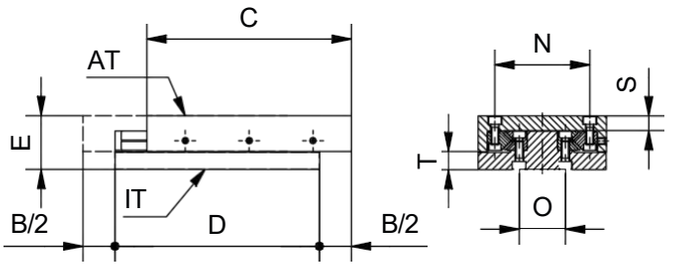

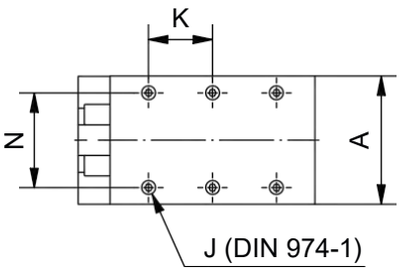

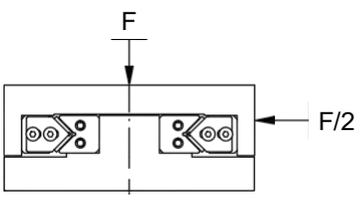

Ordering example:

NOO 100.160.050

Stroke B
Length D
Width A

Standard drilling pattern page 58.
All external surfaces ground.
Customized drilling pattern available on request. Other length and width dimensions on request. We will be pleased to advise you. T-slots on page 56.

Type		A Width	C Length AT	B Stroke	D Length IT	E Height	J	K	N	O	S	T	F dyn. [N]	Weight (kg)	Rail size
100															
	100.110.025		110	25	110								8925	3.1	
	100.160.050		160	50	160								12750	4.6	
NOO	100.210.100	100	210	100	210	42	M6	50	74	36	11.5	13.5	15725	6.1	N6 | O6
	100.260.150		260	150	260								18275	7.5	
	100.310.200		310	200	310								20825	8.9	
150															
	150.160.050		160	50	160								12750	8.7	
	150.210.100		210	100	210								15725	11.4	
NOO	150.310.150	150	310	150	310	52	M6	50	108	70	17.5	17.5	23375	16.8	N6 | O6
	150.310.200		310	200	310								20825	16.8	
	150.460.250		460	250	460								34000	24.9	
200															
	200.210.050		210	50	210								22420	17.0	
	200.310.100		310	100	310								32450	25.0	
NOO	200.310.200	200	310	200	310	58	M8	100	146	94	17.0	16.5	25370	25.0	N9 | O9
	200.410.300		410	300	410								38940	33.0	
	200.410.400		410	400	410								25370	33.0	
	200.510.500		510	500	510								32450	41.0	
300															
	300.310.100		310	100	310								32450	47.0	
	300.410.200		410	200	410								38940	62.0	
NOO	300.410.300	300	410	300	410	72	M8	100	238	186	23.0	23.5	32450	62.0	N9 | O9
	300.410.400		410	400	410								25370	62.0	
	300.510.500		510	500	510								32450	77.0	

Weights from size 200 rounded to the nearest 0.5 kg. Notes on the load data on page 38.

LINEAR SLIDE TYPE NOE, NOM, NOG

Type NOE = with end plates

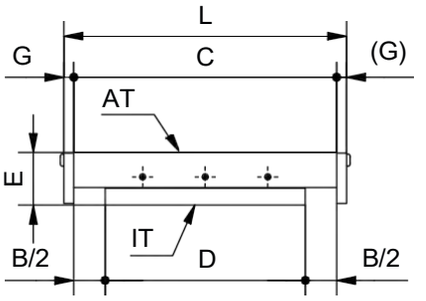

Type NOM = with threaded spindle

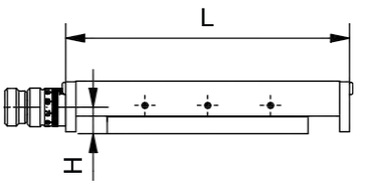

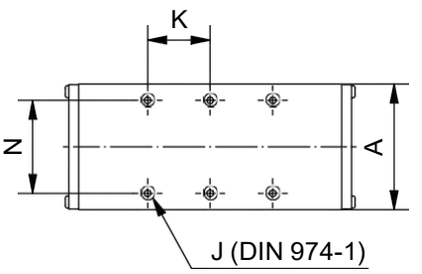

Type NOG = with base plate

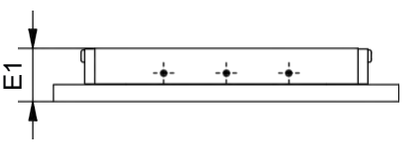

Type		A Width	C Length AT	B Stroke	D Length IT	E Height	E1 NOG	L	G	H	J
100											
NOE | NOM | NOG	100.135.025		135	25	110		42	151			
NOE | NOM | NOG	100.210.050		210	50	160		42	226			
NOE | NOM	100.310.100	100	310	100	210	42	-	326	8	21	M6
NOE | NOM	100.410.150		410	150	260		-	426			
NOE | NOM | NOG	100.510.200		510	200	310		42	526			
150											
NOE | NOM | NOG	150.185.025		185	25	160		52	205			
NOE | NOM | NOG	150.210.050		210	50	160		52	230			
NOE | NOM | NOG	150.235.075		235	75	160		52	255			
NOE | NOM | NOG	150.310.100	150	310	100	210	52	52	330	10	26	M6
NOE | NOM | NOG	150.460.150		460	150	310		52	480			
NOE | NOM | NOG	150.510.200		510	200	310		52	530			
NOE | NOM	150.710.250		710	250	460		-	730			
200											
NOE | NOM | NOG	200.260.050		260	50	210		73	284			
NOE | NOM | NOG	200.410.100		410	100	310		73	434			
NOE | NOM | NOG	200.610.200	200	610	200	410	58	73	634	12	29	M8
NOE | NOM | NOG	200.710.300		710	300	410		73	734			
NOE | NOM | NOG	200.810.400		810	400	410		73	834			
NOE | NOM	200.1010.500		1010	500	510		-	1034			
300											
NOE | NOM	300.410.100		410	100	310		-	440			
NOE | NOM	300.610.200		610	200	410		-	640			
NOE | NOM	300.710.300	300	710	300	410	72	-	740	15	36	M8
NOE | NOM	300.810.400		810	400	410		-	840			
NOE | NOM	300.1010.500		1010	500	510		-	1040			
NOE | NOM	300.1210.600		1210	600	610		-	1040			

Ordering example:
NOE 100.210.050

Stroke B
Length C
Width A

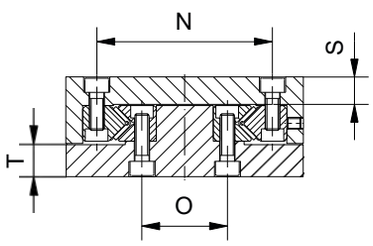

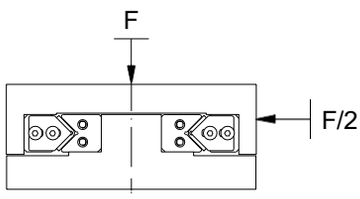

Standard drilling pattern page 58.
All external surfaces ground.
Customized drilling pattern available on request. Other length and width dimensions on request.
We will be pleased to advise you.
T-slots on page 56.

K	N	O	S	T	Spindle	F dyn. [N]	Weight (kg)			Rail size	Reading-accuracy
							NOE	*NOM	NOG		
100											
						8925	4.0	4.1	4.5		
						12750	5.7	5.7	6.6		
50	74	36	11.5	13.5	M12x1	15725	7.6	7.7	-	N6 | O6	0.01
						18275	9.6	9.6	-		
						20825	11.6	11.6	15.5		
150											
						14025	10.6	10.7	11.5		
						12750	11.1	11.3	13.0		
						11475	11.7	11.9	14.5		
50	108	70	17.5	17.5	M16x1	15725	14.9	15.2	18.7	N6 | O6	0.01
						23375	21.6	21.6	27.3		
						20825	22.7	22.8	30.3		
						34000	32.2	32.0	-		
200											
						22420	21.0	21.5	28.5		
						32450	30.5	31.0	42.5		
100	146	94	17.0	16.5	M20x2	38940	42.0	41.5	59.0	N9 | O9	0.02
						32450	45.0	44.5	69.5		
						25370	48.0	48.0	77.0		
						32450	60.0	59.5	-		
300											
						32450	58.0	59.0	-		
						38940	79.0	79.0	-		
100	238	186	23.0	23.5	M20x2	32450	85.0	85.0	-	N9 | O9	0.02
						25370	90.5	91.0	-		
						32450	112.0	112.5	-		
						38940	102.0	103.0	-		

Weights from size 200 rounded to the nearest 0.5 kg. Notes on the load data on page 38.
*NOM Weight with micrometer screw

TECHNICAL DATA

Material	Standard version grey cast iron EN-GJS-400-15, alternative aluminium, other materials upon request
Coating, sliding surface	Without (standard), optionally Turcite B (PTFE) from size 75
Min. & max. width	30 - 300 mm
Lubrication	Usual commercial guideway oils, from size 75 lubrication connections and lubrication grooves are included as standard
Sealing	Insensitive to dirt, guideway wipers are available for heavy dirt
Slide execution	Surfaces ground, optionally chemically nickel-plated or natural anodized (aluminium)
Mounting hole	Without (standard), optionally with standard mounting holes or customer mounting holes
Spindle execution	Ground metric standard spindles, other spindles on request
Pitch accuracy	+/- 0.02 mm on 300 mm length
Maintenance	Low maintenance
Special dimensions and materials	Upon request

NOTES FOR LOADING THE SLIDE

The specified values refer to the centre of the short carriage part, they apply to area loads and as a single load.
These are calculated values.
Deflection of the slide parts is to be expected with the specified loads.
Please observe the load direction.

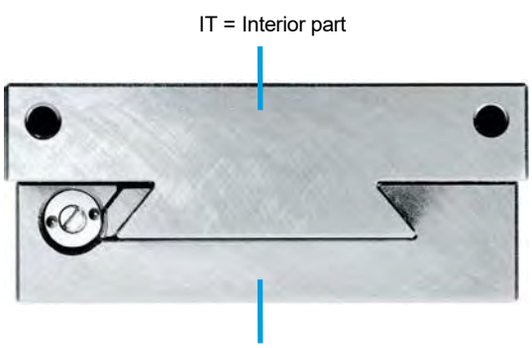

AREAS OF APPLICATION

Positioning, moving, and machining tasks as well as coordinate tables of any kind.
Can be used horizontally or vertically.

ADVANTAGES SERIES S

- Long service life
- Velocity to (15 m/min.) with coated and lubricated version
- Easy adjustment because of conical feed rail
- Smooth running
- Very good vibration damping
- Highest precision
- Economical

Type SO open design (slide parts of equal length)

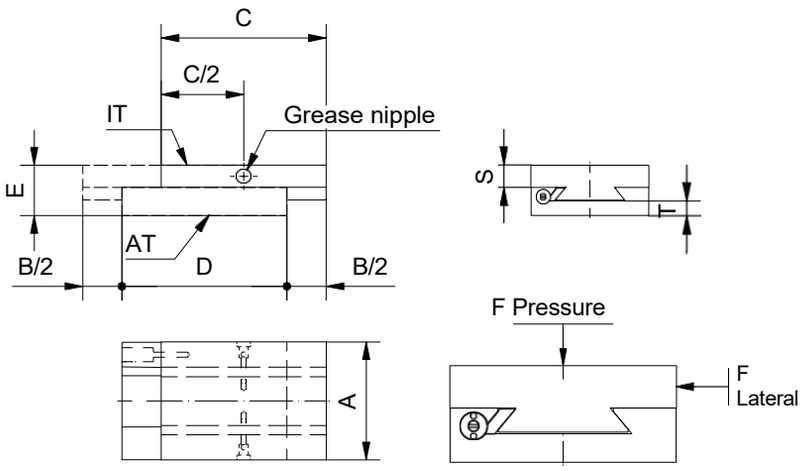

Ordering example:

SO 100.160.050

Stroke B
Length D
Width A

Standard drilling pattern page 59.
All external surfaces ground.
Customized drilling pattern available on request. Other length and width dimensions on request.
We will be pleased to advise you.
T-slots on page 56.

Type		A Width	C Length IT	B Stroke	D Length AT	E Height	S	T	F Pressure dyn. [N]	F lateral dyn. [N]	Weight (kg)
30											
	30.025.010		25	10	25				198	34	0.1
	30.035.020		35	20	35				275	48	0.1
SO	30.035.030	30	35	30	35	17	7	5.4	275	48	0.1
	30.045.040		45	40	45				351	62	0.1
	30.055.050		55	50	55				426	71	0.2
50											
	50.055.025		55	25	55				646	118	0.5
	50.055.050		55	50	55				646	118	0.5
SO	50.080.075	50	80	75	80	26	10	9.5	926	172	0.7
	50.105.100		105	100	105				1198	225	1.1
	50.130.125		130	125	130				1462	279	1.3
	50.155.150		155	150	155				1718	332	2.3
75											
	75.080.025		80	25	80				1318	234	1.4
	75.105.050		105	50	105				1713	307	1.8
SO	75.105.075	75	105	75	105	32	14	9.5	1713	307	1.8
	75.155.100		155	100	155				2478	453	2.6
	75.180.125		180	125	180				2848	526	3.0
	75.205.150		205	150	205				3210	599	3.5
100											
	100.085.025		85	25	85				1848	410	2.4
	100.160.050		160	50	160				3400	772	4.8
SO	100.210.100	100	210	100	210	42	15	14.0	4394	1013	6.0
	100.260.150		260	150	260				5356	1255	7.6
	100.310.200		310	200	310				6284	1496	9.0
	100.410.300		410	300	410				8043	1978	12.0
150											
	150.160.050		160	50	160				5384	1064	8.7
	150.210.100		210	100	210				6998	1397	11.5
SO	150.310.150	150	310	150	310	52	18	16.0	10128	2062	17.0
	150.310.200		310	200	310				10128	2062	17.0
	150.310.250		310	250	310				10128	2062	17.0
	150.410.300		410	300	410				13127	2727	22.5
200											
	200.260.050		260	50	260				9600	2050	21.0
	200.310.100		310	100	310				11350	2450	25.0
SO	200.410.200	200	410	200	410	58	20	17.0	14750	3200	33.0
	200.410.300		410	300	410				14750	3200	33.0
	200.510.400		510	400	510				18050	4000	41.5
	200.610.500		610	500	610				21150	4800	50.0
300											
	300.260.050		260	50	260				13150	2250	39.5
	300.310.100		310	100	310				15550	2700	47.0
	300.410.200		410	200	410				20300	3600	62.0
SO	300.410.300	300	410	300	410	72	24	25.0	20300	3600	62.0
	300.410.400		410	400	410				20300	3600	62.0
	300.510.500		510	500	510				24900	4450	77.0
	300.610.600		610	600	610				29400	5350	92.5

Weights from size 200 rounded to the nearest 0.5 kg. Notes on the load data on page 42.
*Grease nipple at size 75.

DOVETAIL SLIDE TYPE SE, SM

Type SE = with end plates

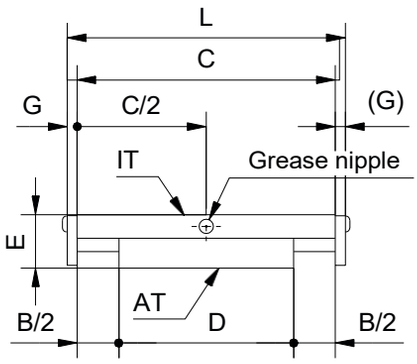

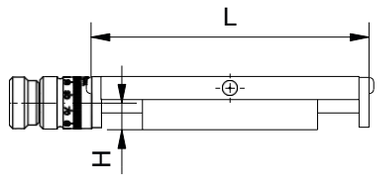

Type SM = with threaded spindle

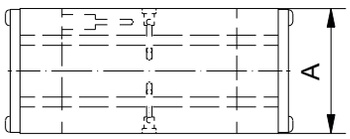

Type		A Width	C Length IT	B Stroke	D Length AT	E Heigth	L	G	H
30									
	30.035.010		35	10	25		41		
	30.055.020		55	20	35		61		
SE | SM	30.065.030	30	65	30	35	17	71	3	8,5
	30.085.040		85	40	45		91		
	30.105.050		105	50	55		111		
50									
	50.080.025		80	25	55		90		
	50.105.050		105	50	55		115		
SE | SM	50.155.075	50	155	75	80	26	165	5	13,0
	50.205.100		205	100	105		215		
	50.255.125		255	125	130		265		
75									
	75.105.025		105	25	80		117		
	75.155.050		155	50	105		167		
SE | SM	75.180.075	75	180	75	105	32	192	6	16,0
	75.255.100		255	100	155		267		
	75.280.125		280	125	155		292		
	75.305.150		305	150	155		317		
100									
	100.110.025		110	25	85		126		
	100.210.050		210	50	160		226		
SE | SM	100.310.100	100	310	100	210	42	326	8	21,0
	100.410.150		410	150	260		426		
	100.510.200		510	200	310		526		
150									
	150.185.025		185	25	160		205		
	150.210.050		210	50	160		230		
SE | SM	150.310.100	150	310	100	210	52	330	10	26,0
	150.460.150		460	150	310		480		
	150.510.200		510	200	310		530		
	150.710.300		710	300	310		730		
200									
	200.310.050		310	50	260		334		
	200.410.100		410	100	310		434		
SE | SM	200.610.200	200	610	200	410	58	634	12	29,0
	200.710.300		710	300	410		734		
	200.810.400		810	400	410		834		
	200.1010.500		1010	500	510		1034		
300									
	300.310.050		310	50	260		340		
	300.410.100		410	100	310		440		
	300.610.200		610	200	410		640		
SE | SM	300.710.300	300	710	300	410	72	740	15	36,0
	300.810.400		810	400	410		840		
	300.1010.500		1010	500	510		1040		
	300.1010.600		1010	600	410		1040		

Ordering example:
SE 100.210.050

Stroke B
Length C
Width A

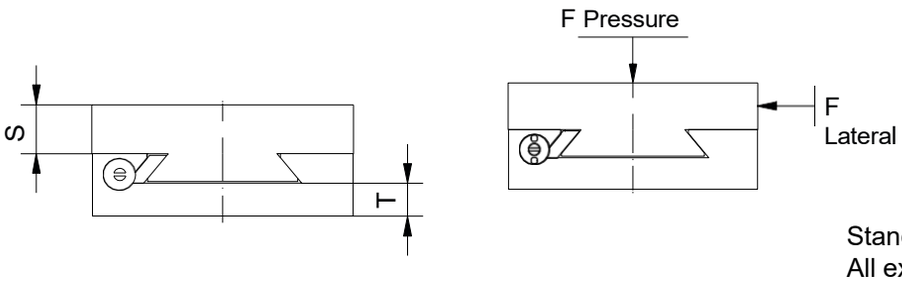

Standard drilling pattern page 59.
All external surfaces ground.
Customized drilling pattern available on request. Other length and width dimensions on request.
We will be pleased to advise you.
T-slots on page 56.

S	T	Spindle	F Pressure dyn.	F Lateral dyn.	Weight (kg)		Reading-accuracy
			[N]		SE	*SM	
30							
			198	34	0.1	0.1	
			275	48	0.2	0.2	
7	5.4	M3x0.5	275	48	0.2	0.2	0.01
			351	62	0.3	0.3	
			426	75	0.3	0.3	
50							
			646	118	0.7	0.8	
			646	118	0.8	0.9	
10	9.5	M6x1	926	172	1.2	1.3	0.02
			1198	225	1.5	1.6	
			1462	279	1.9	2.0	
75							
			1318	234	1.8	1.9	
			1713	307	2.5	2.6	
14	9.5	M8x1	1713	307	2.7	2.8	0.01
			2478	453	3.8	3.9	
			2478	453	4.0	4.0	
			2478	453	4.3	4.4	
100							
			1848	410	3.4	3.5	
			3400	772	6.0	6.1	
15	14.0	M12x1	2374	1013	8.2	8.3	0.01
			5356	1255	10.5	10.6	
			6284	1496	12.8	12.9	
150							
			5384	1064	10.5	10.7	
			5384	1064	11.3	11.5	
18	16.0	M16x1	6998	1397	15.5	15.7	0.01
			10128	2062	22.5	22.7	
			10128	2062	24.0	24.2	
			13127	2727	32.0	32.2	
200							
			9600	2037	25.5	25.5	
			11350	2429	31.5	32.0	
20	17.0	M20x2	14750	3212	44.5	44.0	0.02
			14750	3212	49.0	49.5	
			14750	3212	53.5	54.0	
			18050	3996	66.0	66.5	
300							
			13150	2250	48.5	49.0	
			15550	2700	60.0	60.5	
			20300	3600	83.5	84.0	
24	25.0	M20x2	20300	3600	91.5	92.0	0.02
			20300	3600	99.5	100.0	
			24920	4450	123.0	123.5	
			20300	3600	116.0	116.5	

Weights from size 200 rounded to the nearest 0.5 kg. Notes on the load data on page 42.
*SM Weight with micrometer screw

PNEUMATIC SLIDE TYPE RZ, TVZ, NOZ WITH CYLINDER

AREAS OF APPLICATION

Positioning, moving, and machining tasks.
Horizontal design (standard).
Please note vertical design for type RZ when ordering.

MATERIAL AND SLIDE DESIGN

Material: EN-GJS-400-15 (standard), alternative aluminium.
All external surfaces ground.
On request, the slides can be chemically nickel-plated or anodized (aluminium).
Other materials on request.
Interior part with honed cylinder hole and side holes for hydraulic or pneumatic connections.
Larger cylinder holes on request.
All types and sizes can be combined with each other. Max. operating pressure 65 bar.

ADVANTAGES LINEAR SLIDE TYPE RZ, TVZ, NOZ

- Long service life
- Space-saving design
- Interchangeability of individual parts
- Highest precision
- Economical

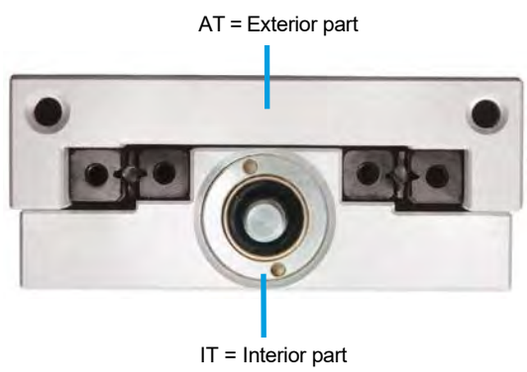

Type		A Width	C Length AT	B Stroke	D Length IT	E Height	L	G	H	J	K	N	O	S
75														
	75.105.025		105	25	80		117							
	75.155.050		155	50	105		167							
RZ | TVZ	75.205.075	75	205	75	130	32	217	6	11	M4	25	52	30	10.0
	75.255.100		255	100	155		267							
100														
	100.135.025		135	25	110		151							
	100.210.050		210	50	160		226							
RZ | TVZ | NOZ	100.310.100	100	310	100	210	42	326	8	15	M6	50	74	36	11.5
	100.410.150		410	150	260		426							
	100.510.200		510	200	310		526							
150														
	150.185.025		185	25	160		205							
	150.210.050		210	50	160		230							
RZ | TVZ | NOZ	150.310.100	150	310	100	210	52	330	10	17	M6	50	108	70	17.5
	150.460.150		460	150	310		480							
	150.510.200		510	200	310		530							
	150.710.250		710	250	460		730							
200														
	200.260.050		260	50	210		284							
	200.410.100		410	100	310		434							
RZ | TVZ | NOZ	200.610.200	200	610	200	410	58	634	12	20	M8	100	146	94	17.0
	200.710.300		710	300	410		734							
300														
RZ | TVZ | NOZ	300.410.100	300	410	100	310	72	440	15	23	M8	100	238	186	23.0
RZ | TVZ | NOZ	300.610.200	300	610	200	410	72	640	15	23	M8	100	238	186	23.0

*Load data for TVZ with 50 bar hydraulic pressure.

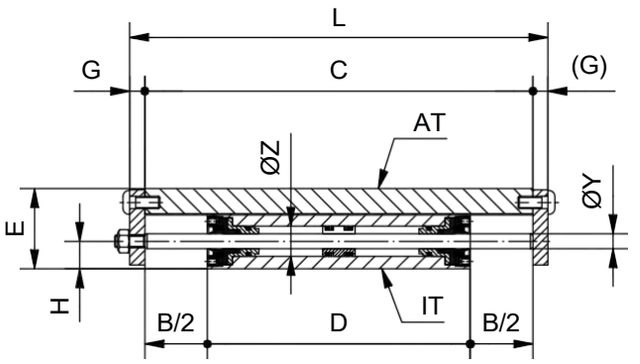

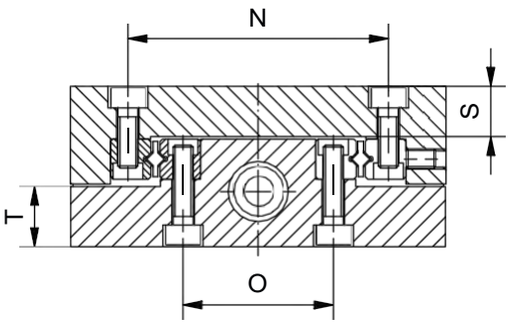

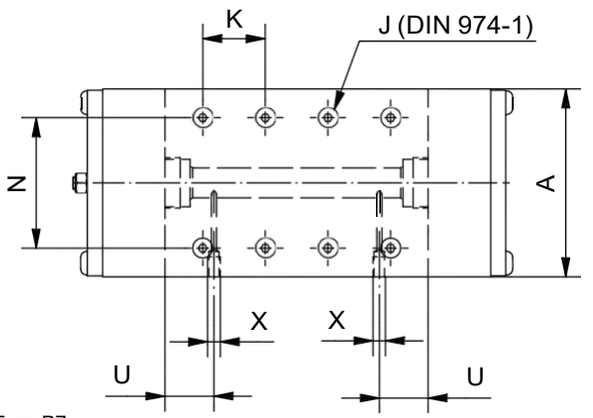

E.g., Type RZ

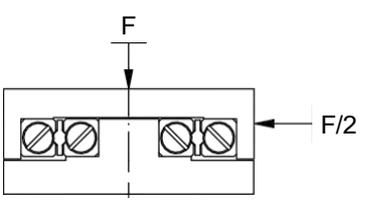

Standard drilling pattern Type RZ, TVZ und NOZ at page 58.

T	Piston-area [mm²]	U	X	Y	Z	*F dyn. [N]			Weight (kg)			Rail size
						RZ	TVZ	NOZ	RZ	TVZ	NOZ	RZ, TVZ, NOZ
75												
						792	133	-	1.7	1.6	-	
						924	178	-	2.3	2.2	-	
12.0	84	19.5	M5	Ø6	Ø12	1122	222	-	2.8	2.9	-	R3. M3 | V3. -
						1254	267	-	3.4	3.5	-	
100												
						2925	428	8925	3.8	3.8	3.9	
						4095	641	12750	5.4	5.7	5.5	
13.5	172	19.5	M5	Ø6	Ø16	4973	855	15725	7.3	7.8	7.4	R6. M6 | V6. N6 | O6
						5850	1069	17333	9.1	9.8	9.2	
						6728	1283	17333	11.0	11.8	11.2	
150												
						4388	641	14025	10.1	10.2	10.3	
						4095	641	12750	10.7	11.0	10.9	
17.5	412	40.0	G1/8	Ø10	Ø25	4973	855	15725	14.4	15.0	14.6	R6. M6 | V6. N6 | O6
						7605	1283	23375	20.7	21.5	21.0	
						6728	1283	20825	21.8	22.7	22.1	
						10823	1924	34000	30.6	31.5	31.0	
200												
						10200	1494	22420	20.0	20.0	20.3	
						14450	2241	32450	29.0	30.0	29.4	
16.5	593	30.0	G1/8	Ø12	Ø30	17850	2988	38940	40.0	42.0	40.6	R9. M9 | V9. N9 | O9
						14450	2988	32450	43.0	46.0	43.6	
300												
23.5	761	40.0	G1/8	Ø16	Ø35	14450	2241	32450	56.5	57.5	57.3	R9. M9 | V9. N9 | O9
23.5	761	40.0	G1/8	Ø16	Ø35	17850	2988	38940	77.0	79.0	78.1	R9. M9 | V9. N9 | O9

Weights from size 200 rounded to the nearest 0.5 kg. Notes on the load data on page 46.

ADVANTAGES PNEUMATIC SLIDE TYPE SZ

- Long service life
- Space-saving design
- Very good vibration damping
- Highest precision
- Economical

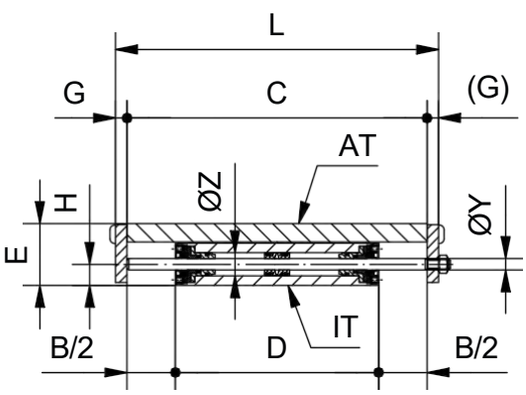

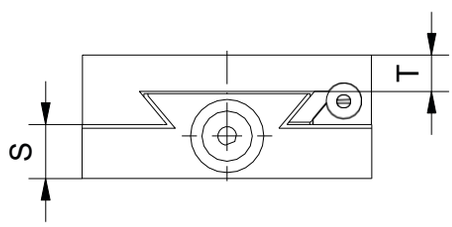

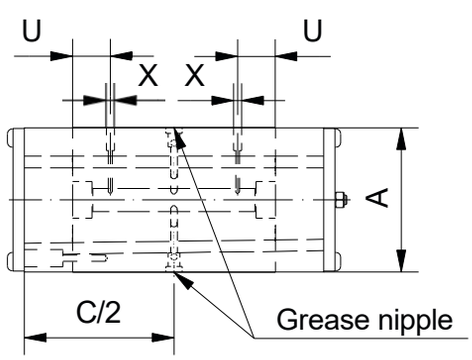

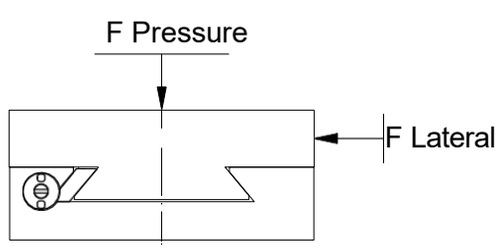

Type		A Width	C Length AT	B Stroke	D Length IT	E Height	L	G	H	S	T	Piston-area [mm²]	U	X	Y	Z	Pressure dyn.	Lateral dyn.	Weight (kg)
																	[N]		
75																			
	75.105.025		105	25	80		117										1060	234	1.7
SZ	75.155.050	75	155	50	105	32	167	6	11	14	9.5	84	19.5	M5	Ø6	Ø12	1060	307	2.3
	75.255.100		255	100	155		267										1060	453	3.5
100																			
	100.210.050		210	50	160		226										2160	772	5.7
	100.310.100		310	100	210		326										2160	1013	7.8
SZ	100.410.150	100	410	150	260	42	426	8	15	15	14.0	172	19.5	M5	Ø6	Ø16	2160	1255	10.0
	100.510.200		510	200	310		526										2160	1496	12.0
150																			
	150.185.025		185	25	160		205										5154	1064	10.0
	150.210.050		210	50	160		230										5154	1064	11.0
SZ	150.310.100	150	310	100	210	52	330	10	17	18	16.0	412	40.0	G1/8	Ø10	Ø25	5154	1397	15.0
	150.460.150		460	150	310		480										5154	2062	21.0
	150.510.200		510	200	310		530										5154	2062	22.5
	150.710.250		710	250	460		730										5154	2727	30.5
200																			
	200.310.050		310	50	260		334										7422	2037	24.0
	200.410.100		410	100	310		434										7422	2429	30.0
SZ	200.610.200	200	610	200	410	58	634	12	20	20	17.0	593	30.0	G1/8	Ø12	Ø30	7422	3212	41.0
	200.710.300		710	300	410		734										7422	3212	45.0
300																			
SZ	300.410.100	300	410	100	310	72	440	15	23	24	25.0	761	40.0	G1/8	Ø16	Ø35	9513	2706	58.0
SZ	300.610.200	300	610	200	410	72	640	15	23	24	25.0	761	40.0	G1/8	Ø16	Ø35	9513	3579	80.0

* Load data for with 50 bar hydraulic pressure 50 bar. Notes on the load data on page 42.

EXPLANATION OF TERMS STANDARD DRILLING PATTERN

Here you can see the standard drilling pattern of the pneumatic slide type SZ (series R, TV, NO, S from page 58) The sizes 30 - 50 are made with thread, without counterbores.

From size 75, counterbores are made in the exterior part.

If the slide length “C” (exterior part) is less than 2 x slide width “A”, only 4 holes with the hole spacing “B” x “B” can be made in this part.

If “C” is equal to or greater than 2 x slide width “A”, 6 holes are drilled. In the interior part, 4 holes as standard.

On request, we will apply additional drillings or your individual drilling pattern.

POSSIBLE MOUNTING HOLES

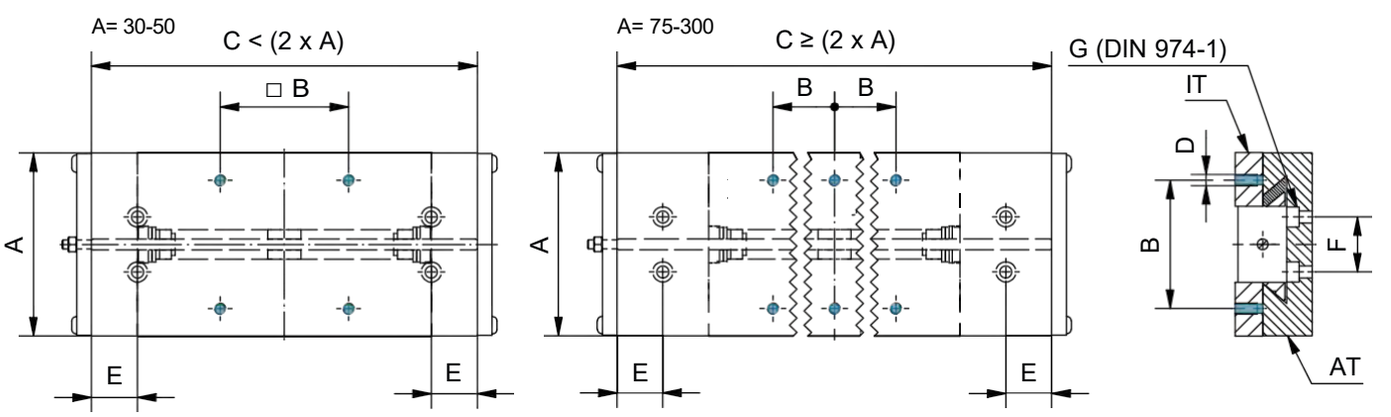

A = Slide width

We will be happy to advise you on customer-specific drilling patterns.

	A	C	B	D	E	F	G
with threaded hole	30	< 60	1x22	M3	5	22	M3
	30	≥ 60	2x22	M3	5	22	M3
	50	< 100	1x35	M4	15	35	M4
	50	≥ 100	2x35	M4	15	35	M4
with counterbore	75	< 150	1x50	M5	25	23	5.5
	75	≥ 150	2x50	M5	25	23	5.5
	100	< 200	1x70	M6	25	30	6.6
	100	≥ 200	2x70	M6	25	30	6.6
	150	< 300	1x120	M8	25	48	9.0
	150	≥ 300	2x120	M8	25	48	9.0
	200	< 400	1x160	M10	50	80	11.0
	200	≥ 400	2x160	M10	50	80	11.0
	300	< 600	1x260	M12	50	150	13.5
	300	≥ 600	2x260	M12	50	150	13.5

OVERVIEW OF THE VARIOUS STANDARD OPTIONS

The following options are available as standard with our linear slides. Technical feasibility see dimension table Page 52.

Free shaft end

In the free shaft end version, you have the option of attaching your own components.

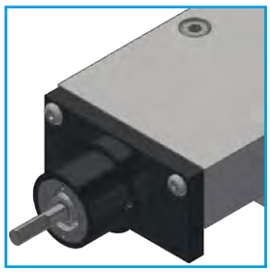

Micrometer screw

Micrometer screw allows you to position with a setting accuracy of 0.02 mm.

Handwheel

With the handwheel you can move larger strokes in a short time. (Setting accuracy: 0.02mm).

Crank handle

With the ball crank you have the same advantages as with the handwheel version.

Position indicator

The position indicator serves you for quick checking and setting of strokes. Accuracies and display options can be found on page 55.

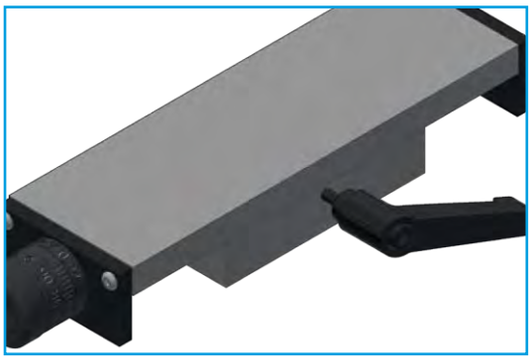

Clamping type ZL

Is done via a clamping lever or a screw, by means of the conical feed rail is clamped onto the long slide part and thus a larger clamping surface is obtained.

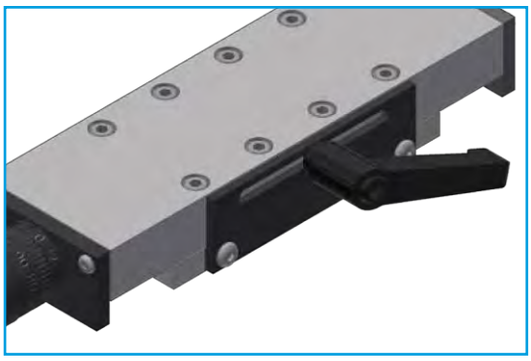

Clamping type F

A plate with a slotted hole (length > stroke) screwed to the short slide part can be clamped by a clamping lever or screw attached to the long slide part.

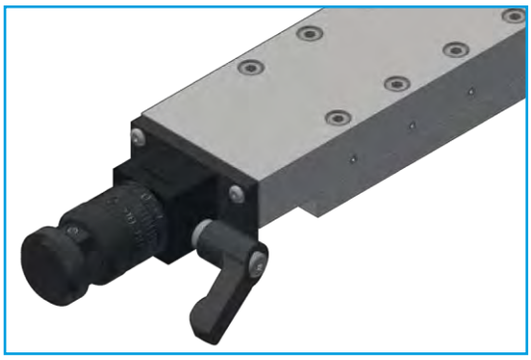

Clamping type SKL

The spindle clamping is the locking of the spindle. The locking secures the spindle against unintentional twisting.

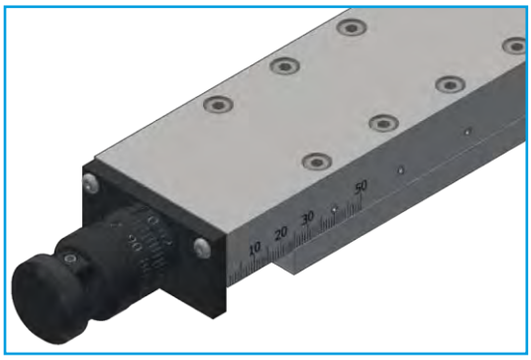

Engraved scale

Thanks to the engraved scale, the position of the slide can be quickly read off the slide. You can see the possibilities of scaling on page 56.

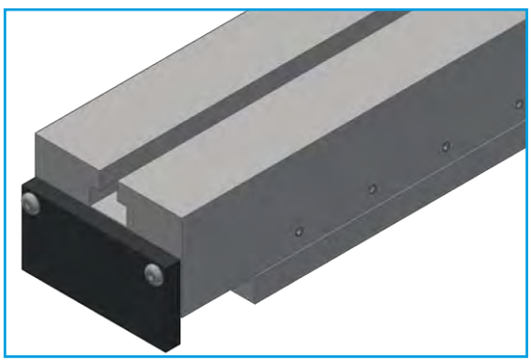

T-slot

We have the possibility for you to mill T-slots in the in the slide parts. You can see the feasibilities on page 56.

OPTIONS SPINDLE DESIGN LINEAR SLIDE SIZE CART

FW = with free shaft end

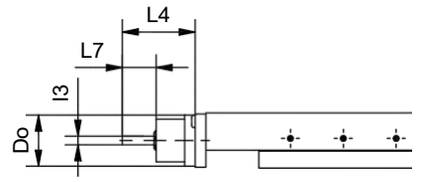

MI = with micrometer screw

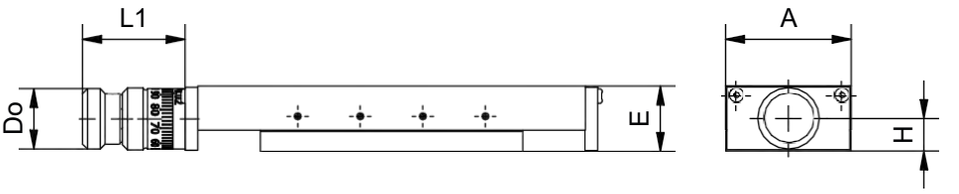

HR = with handwheel

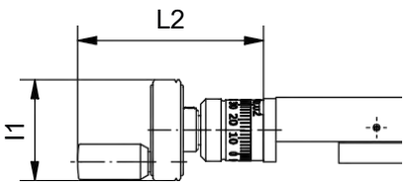

KK = with crank handle

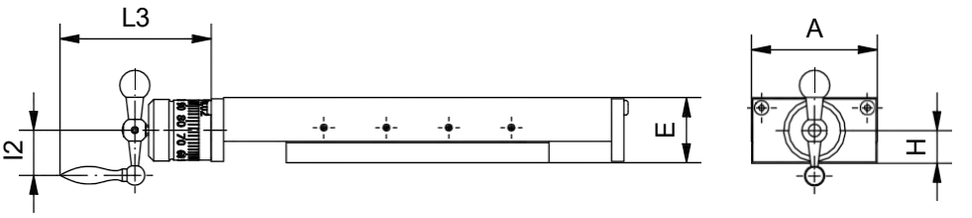

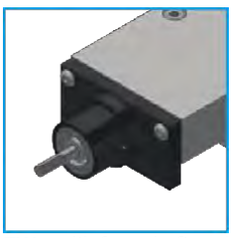

FW= with free shaft end

MI= with micrometer screw

HR= with handwheel

KK=with crank handle

For technical reasons, these options are only possible for linear slides with threaded spindle.

Type	A Width	E Height	L1 MI	L2 HR	L3 KK	L4 FW	L5 SKL	H	Do MI	l1 HR	l2 KK	l3 h7 x L7 FW
30												
RO | TVO | NOO	30	17	-	-	-	-	-	-	-	-	-	-
SO	30	17	-	-	-	-	-	-	-	-	-	-
RM | TVM | NOM	30	17	23.0	-	-	18.0	15	8.5	Ø14	-	-	Ø2 x 8.5
SM	30	17	23.0	-	-	18.0	15	8.5	Ø14	-	-	Ø2 x 8.5
50												
RO | TVO | NOO	50	26	-	-	-	-	-	-	-	-	-	-
SO	50	26	-	-	-	-	-	-	-	-	-	-
RM | TVM | NOM	50	26	41.0	74	61	34.5	20	13.0	Ø24	Ø40	18	Ø4 x 16
SM	50	26	41.0	74	61	34.5	20	13.0	Ø24	Ø40	18	Ø4 x 16
75												
RO | TVO | NOO	75	32	-	-	-	-	-	-	-	-	-	-
SO	75	32	-	-	-	-	-	-	-	-	-	-
RM | TVM | NOM	75	32	48.5	80	66	38.0	22	16.0	Ø30	Ø40	18	Ø5 x 18
SM	75	32	48.5	80	66	38.0	22	16.0	Ø30	Ø40	18	Ø5 x 18
100												
RO | TVO | NOO	100	42	-	-	-	-	-	-	-	-	-	-
SO	100	42	-	-	-	-	-	-	-	-	-	-
RM | TVM | NOM	100	42	48.5	80	66	38.0	22	21.0	Ø30	Ø40	18	Ø5 x 18
SM	100	42	48.5	80	66	38.0	22	21.0	Ø30	Ø40	18	Ø5 x 18
150												
RO | TVO | NOO	150	52	-	-	-	-	-	-	-	-	-	-
SO	150	52	-	-	-	-	-	-	-	-	-	-
RM | TVM | NOM	150	52	69.0	108	105	52.0	26	26.0	Ø48	Ø80	41	Ø10 x 27
SM	150	52	69.0	108	105	52.0	26	26.0	Ø48	Ø80	41	Ø10 x 27
200												
RO | TVO | NOO	200	58	-	-	-	-	-	-	-	-	-	-
SO	200	58	-	-	-	-	-	-	-	-	-	-
RM | TVM | NOM	200	58	69.0	130	105	52.0	32	29.0	Ø48	Ø100	41	Ø10 x 27
SM	200	58	69.0	130	105	52.0	32	29.0	Ø48	Ø100	41	Ø10 x 27
300												
RO | TVO | NOO	300	72	-	-	-	-	-	-	-	-	-	-
SO	300	72	-	-	-	-	-	-	-	-	-	-
RM | TVM | NOM	300	72	102.0	170	-	87.0	34	36.0	Ø68	Ø125	-	Ø14 x 39
SM	300	72	102.0	170	-	87.0	34	36.0	Ø68	Ø125	-	Ø14 x 39

F = with clamping type F

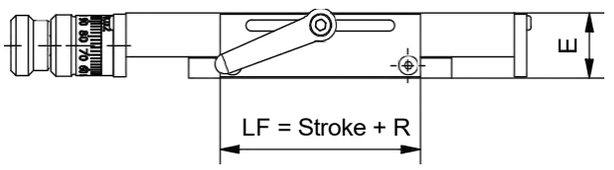

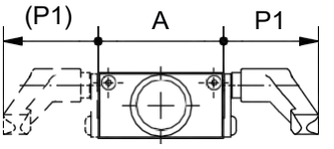

For all series: R, TV, NO possible
For dovetail slides series S on request.

ZL = with clamping to conical feed rail

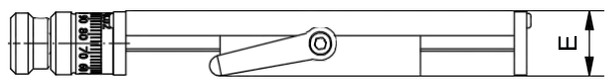

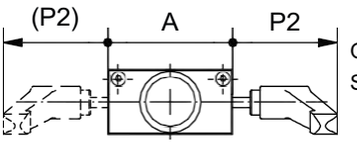

Only possible with dovetail slide series S.

SKL = with spindle clamping

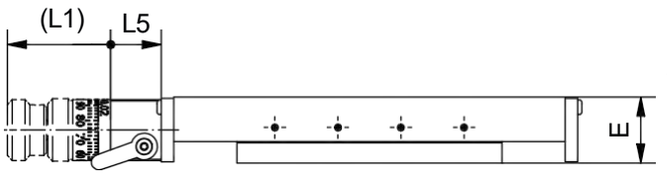

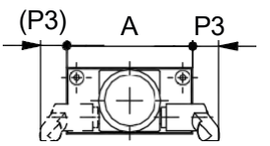

Only possible for linear slides with threaded spindle type M.

Type	A Width	E Height	R	P1	P2	P3	Clamping lever			Spindle
			F		ZL	SKL	F	ZL	SKL	
30										
RO | TVO | NOO	30	17	8	35	-	-	M3	-	-	-
SO	30	17	-	-	35	-	-	M3	-	-
RM | TVM | NOM	30	17	8	35	-	16	M3	-	M3	M3x0.5
SM	30	17	-	-	35	16	-	M3	M3	M3x0.5
50										
RO | TVO | NOO	50	26	30	40	-	-	M4	-	-	-
SO	50	26	-	-	42	-	-	M4	-	-
RM | TVM | NOM	50	26	30	40	-	11	M4	-	M3	M6x1
SM	50	26	-	-	42	11	-	M4	M3	M6x1
75										
RO | TVO | NOO	75	32	30	40	-	-	M4	-	-	-
SO	75	32	-	-	40	-	-	M5	-	-
RM | TVM | NOM	75	32	30	40	-	14	M4	-	M4	M8x1
SM	75	32	-	-	40	14	-	M5	M4	M8x1
100										
RO | TVO | NOO	100	42	40	40	-	-	M5	-	-	-
SO	100	42	-	-	40	-	-	M5	-	-
RM | TVM | NOM	100	42	40	40	-	2	M5	-	M4	M12x1
SM	100	42	-	-	40	2	-	M5	M4	M12x1
150										
RO | TVO | NOO	150	52	40	40	-	-	M6	-	-	-
SO	150	52	-	-	40	-	-	M6	-	-
RM | TVM | NOM	150	52	40	40	-	-20	M6	-	M6	M16x1
SM	150	52	-	-	40	-20	-	M6	M6	M16x1
200										
RO | TVO | NOO	200	58	40	50	-	-	M8	-	-	-
SO	200	58	-	-	55	-	-	M8	-	-
RM | TVM | NOM	200	58	40	50	-	-37	M8	-	M8	M20x2
SM	200	58	-	-	55	-37	-	M8	M8	M20x2
300										
RO | TVO | NOO	300	72	40	50	-	-	M8	-	-	-
SO	300	72	-	-	55	-	-	M8	-	-
RM | TVM | NOM	300	72	40	50	-	-70	M8	-	M8	M20x2
SM	300	72	-	-	55	-70	-	M8	M8	M20x2

CAD-DATA AT OUR WEBSITE

At our website you can create your individual cad model
and download it in countless formats.

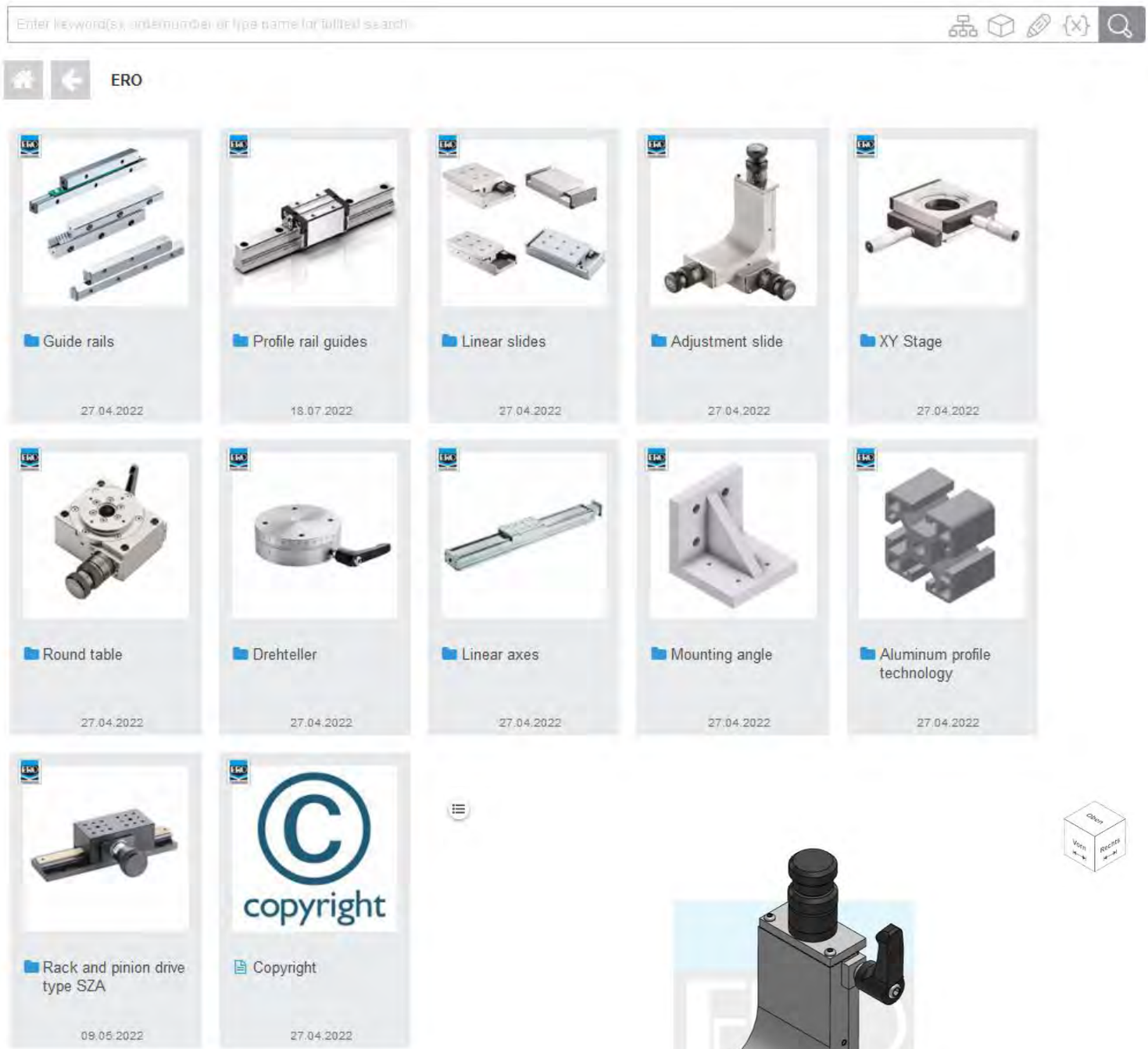

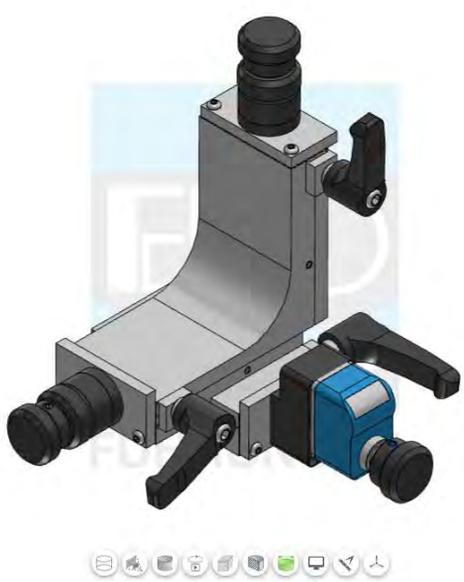

e.g. Adjustment slide type:
VSLS 50 XYZ-NE-SPK-XPA1AD

https://ero-fuehrungen.de/en/cad-daten/

Reading direction

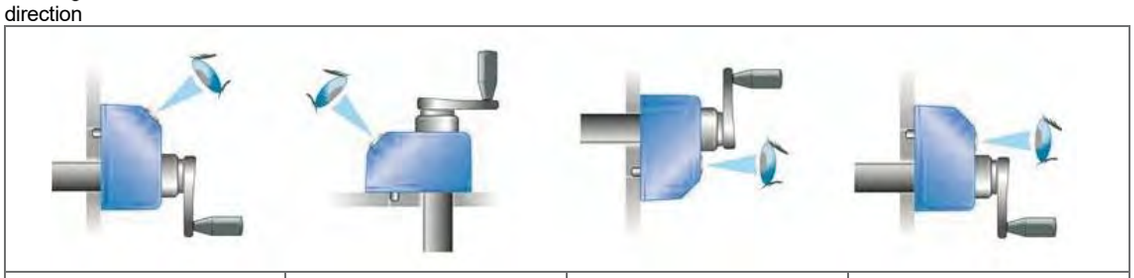

A	B	C	D

Position indicators are supplied in blue as standard.

In the graphics and tables shown here you can see the standard types.

For special requests please contact us.

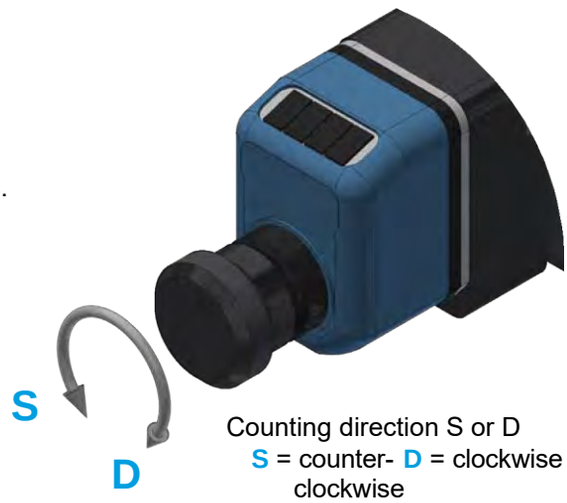

Counting direction S or D
S = counter- D = clockwise
clockwise

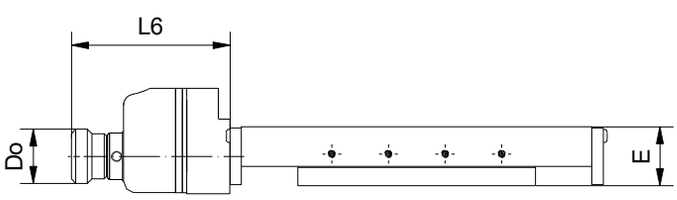

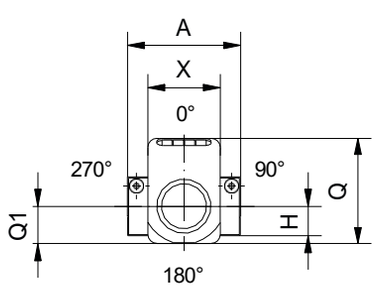

Position inadicator mountablde in 4 positions
Standard 0°

For technical reasons, position indicators are only possible on slides with threaded spindle.

Type	A Width	E Height	L6 PA	H	Do	Spindle	Position-indicator	*Indication after 1 rotation		X	Q	Q1
								Stroke< 100	Stroke ≥ 100			
30												
RM | TVM | NOM | SM	30	17	46	8.5	Ø14	M3x0.5	EOP2	00.5	-	23.0	38.0	10.5
50												
RM | TVM | NOM | SM	50	26	70	13.0	Ø24	M6x1	EOP3	01.00	001.0	32.0	46.5	16.5
75												
RM | TVM | NOM | SM	75	32	74	16.0	Ø30	M8x1	EOP3	01.00	001.0	32.0	46.5	16.5
100												
RM | TVM | NOM | SM	100	42	74	21.0	Ø30	M12x1	EOP3	01.00	001.0	32.0	46.5	16.5
150												
RM | TVM | NOM | SM	150	52	99	26.0	Ø48	M16x1	EOP7	001.00	001.00	50.0	69.0	27.0
200												
RM | TVM | NOM | SM	200	58	99	29.0	Ø48	M20x2	EOP7	0002.0	0002.0	50.0	69.0	27.0
300												
RM | TVM | NOM | SM	300	72	143	36.0	Ø68	M20x2	EOP7	0002.0	0002.0	50.0	69.0	27.0

* Digital position indicators on request.

Do you have any questions? We will be happy to help you, write to us **vertrieb@ero-fuehrungen.de**

OPTIONS SCALE & T-SLOT SIZE CHART

SR / SL = with engraved scale right / left

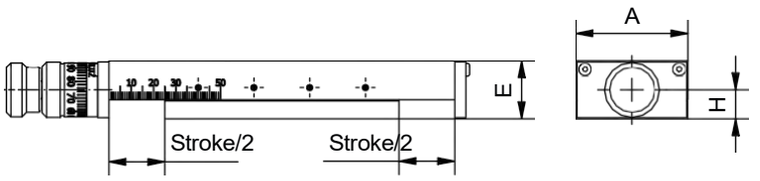

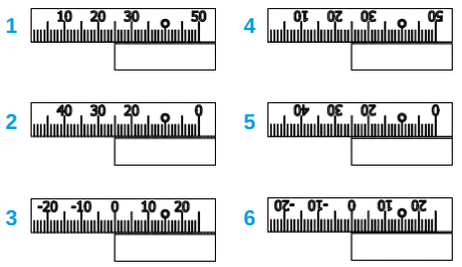

1 = 0 - max. stroke

2 = max. stroke - 0

3 = -1/2 stroke - +1/2 stroke

4 = 1 rotated by 180°

5 = 2 rotated by 180°

6 = 3 rotated by 180°

The numbers indicate the possible engravings.

TA / TI = with T-slot in interior or exterior part

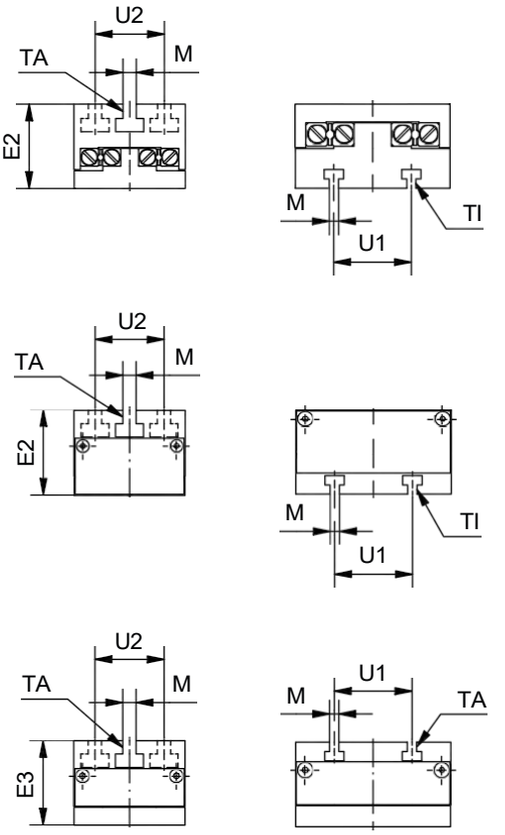

If needed, we can also attach custom scales for you.

Type	A Width	E Height	E2* TA/TI T-slot	E3** RG TA T-slot	H	M (DIN-650) T-slot	U1 Distance 2 T-slots	U2 Distance 3 T-slots
50								
RO | TVO | NOO | SO	50	26	38	38	-	6H7	-	-
RM | TVM | NOM | SM	50	26	38	38	13	6H7	-	-
75								
RO | TVO | NOO | SO	75	32	44	44	-	6H7	-	-
RM | TVM | NOM | SM	75	32	44	44	16	6H7	-	-
100								
RO | TVO | NOO | SO	100	42	54	54	-	6H7	50	-
RM | TVM | NOM | SM	100	42	54	54	21	6H7	50	-
150								
RO | TVO | NOO | SO	150	52	68	68	-	8H7	75	-
RM | TVM | NOM | SM	150	52	68	68	26	8H7	75	-
200								
RO | TVO | NOO | SO	200	58	74	89	-	8H7	100	-
RM | TVM | NOM | SM	200	58	74	89	29	8H7	100	-
300								
RO | TVO | NOO | SO	300	72	88	-	-	10H7	-	110
RM | TVM | NOM | SM	300	72	88	-	36	10H7	-	110

T-slots are available from size 50. E2* TA = T-slot in exterior part, TI = T-slot in interior part. E3** T-slot only in exterior part for base plate design.

Do you have any questions? We will be happy to help you, write to us **vertrieb@ero-fuehrungen.de**

FASTENING THE SPINDLE NUT

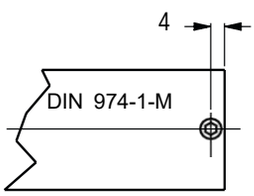

Gr. 30

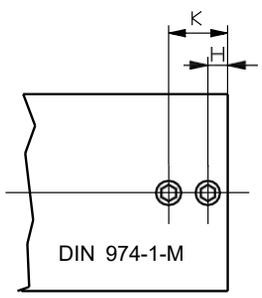

Gr. 50 - 150

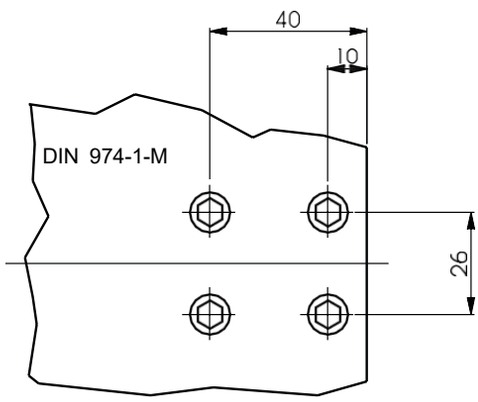

Gr. 200 - 300

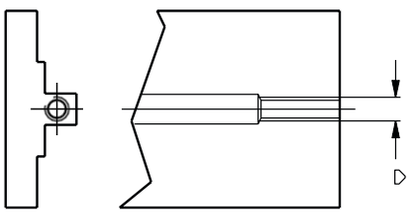

Gr. 30 + Gr. 50 Linear slide series R, TV, NO
Nut thread directly in the interior part.

A Slide width	D	H	K
30	M3 x 0.5	-	-
50	M6 x 1	5.0	15.0
75	M8 x 1	5.0	15.0
100	M12 x 1	7.5	22.5
150	M16 x 1	10.0	30.0
200	M20 x 2	-	-
300	M20 x 2	-	-

EXPLANATION OF TERMS STANDARD DRILLING PATTERN

Here you can see the standard drilling pattern of the R, TV, NO series slides (S series on page 59)

Sizes 30 - 50 are threaded, without counterbores.

From size 75, counterbores are made in the interior part.

If slide length “C” (exterior part) is less than 2 x slide width “A”, only 4 holes with hole spacing “B” x “B” can be made in this part.

If “C” is equal to or greater than 2 x slide width “A”, 6 holes are drilled. In the interior part 4 holes are standard.

On request, we can drill additional holes or your individual drilling pattern.

POSSIBLE MOUNTING HOLES

A= 30-50

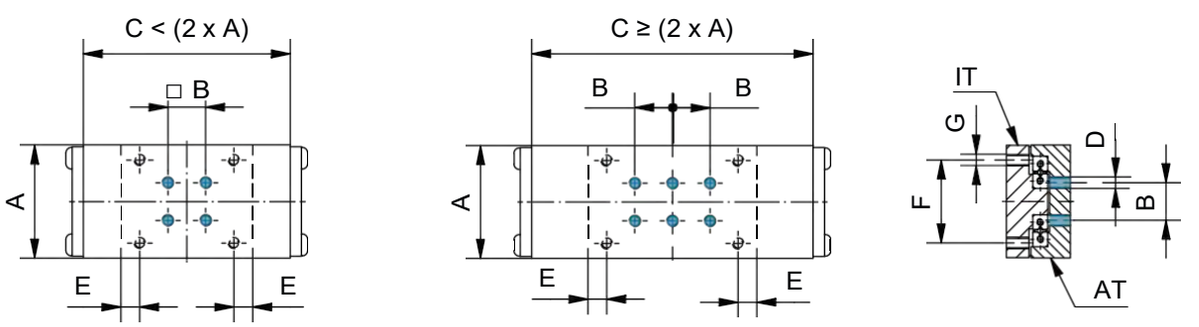

A= 75-300

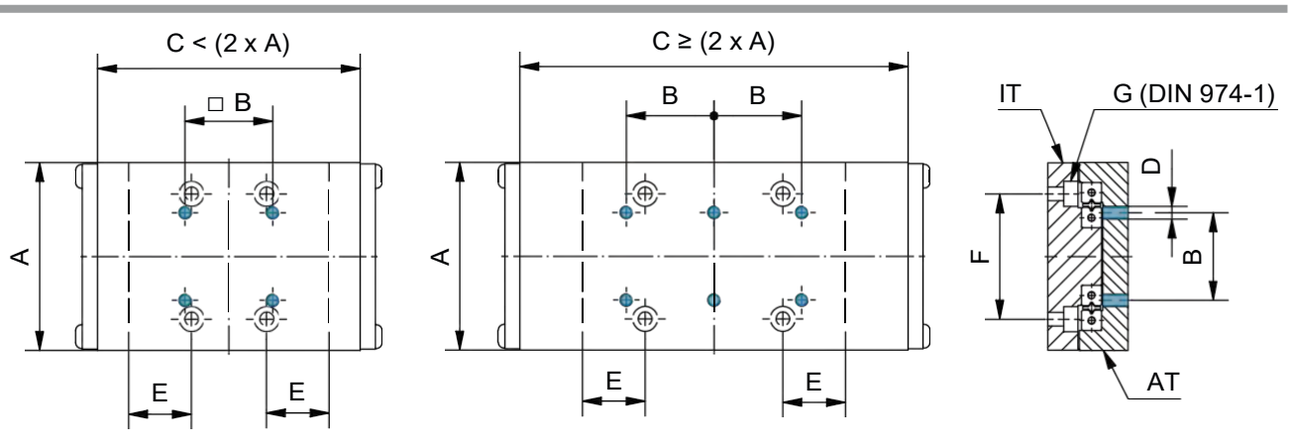

EZ = Dimension E for cylinder version

	A	C	B	D	E	EZ	F	G
with threaded hole	30	< 60	1x10	M3	5	-	22	M3
	30	≥ 60	2x10	M3	5	-	22	M3
	50	< 100	1x25	M4	15	-	35	M4
	50	≥ 100	2x25	M4	15	-	35	M4
with counterbore	75	< 150	1x35	M5	25	30	50	5.5
	75	≥ 150	2x35	M5	25	30	50	5.5
	100	< 200	1x45	M6	25	30	70	6.6
	100	≥ 200	2x45	M6	25	30	70	6.6
	150	< 300	1x80	M8	25	25	120	9.0
	150	≥ 300	2x80	M8	25	25	120	9.0
	200	< 400	1x100	M10	50	50	160	11.0
	200	≥ 400	2x100	M10	50	50	160	11.0
	300	< 600	1x200	M12	50	50	260	13.5
	300	≥ 600	2x200	M12	50	50	260	13.5

We will be happy to advise you on customized drilling patterns.

EXPLANATION OF TERMS STANDARD DRILLING PATTERN

Here you can see the standard drilling pattern of the S series slides (R, TV, NO series on page 58)

Sizes 30 - 50 are threaded, without counterbores.

From size 75, counterbores are made in the exterior part.

If slide length “C” (exterior part) is less than 2 x slide width “A”, only 4 holes with hole spacing “B” x “B” can be made in this part.

If “C” is equal to or greater than 2 x slide width “A”, 6 holes are drilled. In the interior part 4 holes are standard.

On request, we can drill additional holes or your individual drilling pattern.

POSSIBLE MOUNTING HOLES

A= 30-50

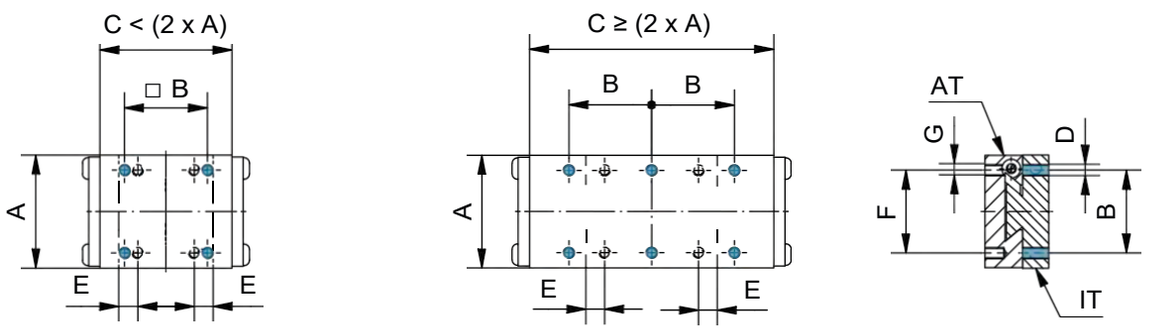

A= 75-300

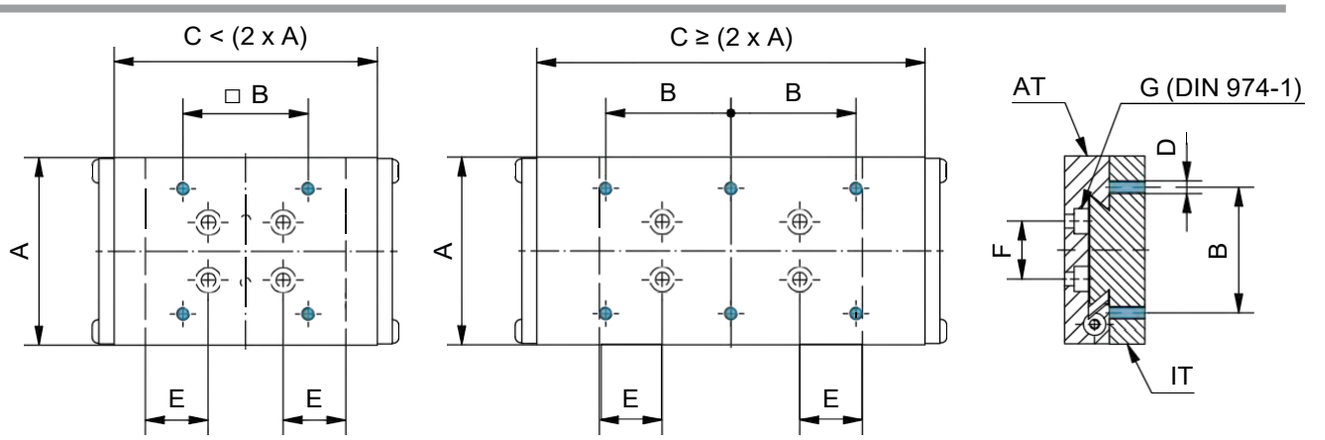

Drilling pattern for dovetail slide cylinder on page 49.

	A	C	B	D	E	F	G
with threaded hole	30	< 60	1x22	M3	5	22	M3
	30	≥ 60	2x22	M3	5	22	M3
	50	< 100	1x35	M4	15	35	M4
	50	≥ 100	2x35	M4	15	35	M4
with counterbore	75	< 150	1x50	M5	25	23	5.5
	75	≥ 150	2x50	M5	25	23	5.5
	100	< 200	1x70	M6	25	30	6.6
	100	≥ 200	2x70	M6	25	30	6.6
	150	< 300	1x120	M8	25	48	9.0
	150	≥ 300	2x120	M8	25	48	9.0
	200	< 400	1x160	M10	50	80	11.0
	200	≥ 400	2x160	M10	50	80	11.0
	300	< 600	1x260	M12	50	150	13.5
	300	≥ 600	2x260	M12	50	150	13.5

We will be happy to advise you on customized drilling patterns.

ROTARY PLATE TYPE DTSF

Rotary plates for linear slides can be used from Slide size 75 - 300.
They allow a rotatability of 360°.
The scale division is 1° and can be read by 90° to the left and right.

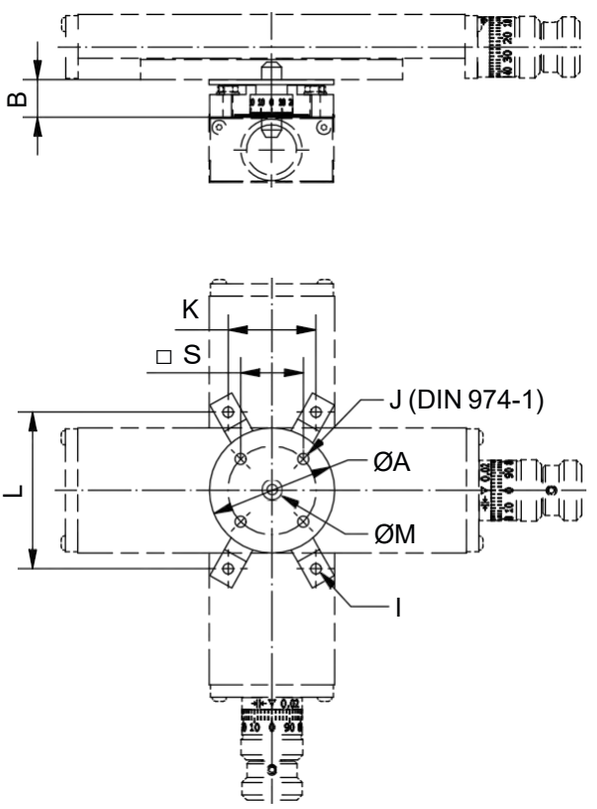

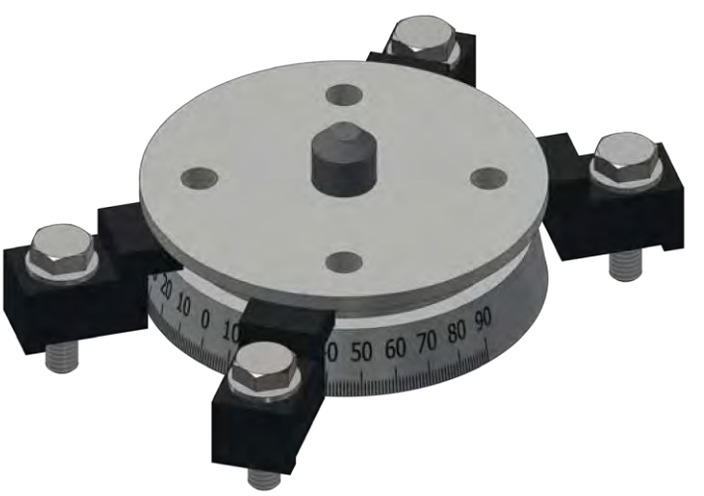

A Rotary-plate-Ø	B Height	I	J	K	L	ØM g6	S
50	15	M4	4	35	62.5	8	25
75	18	M6	5	55	77.5	10	35
100	18	M6	5	80	90.0	10	50
150	20	M8	8	120	140.0	16	70
200	20	M8	8	165	165.0	16	120
300	22	M10	10	265	245.0	16	160

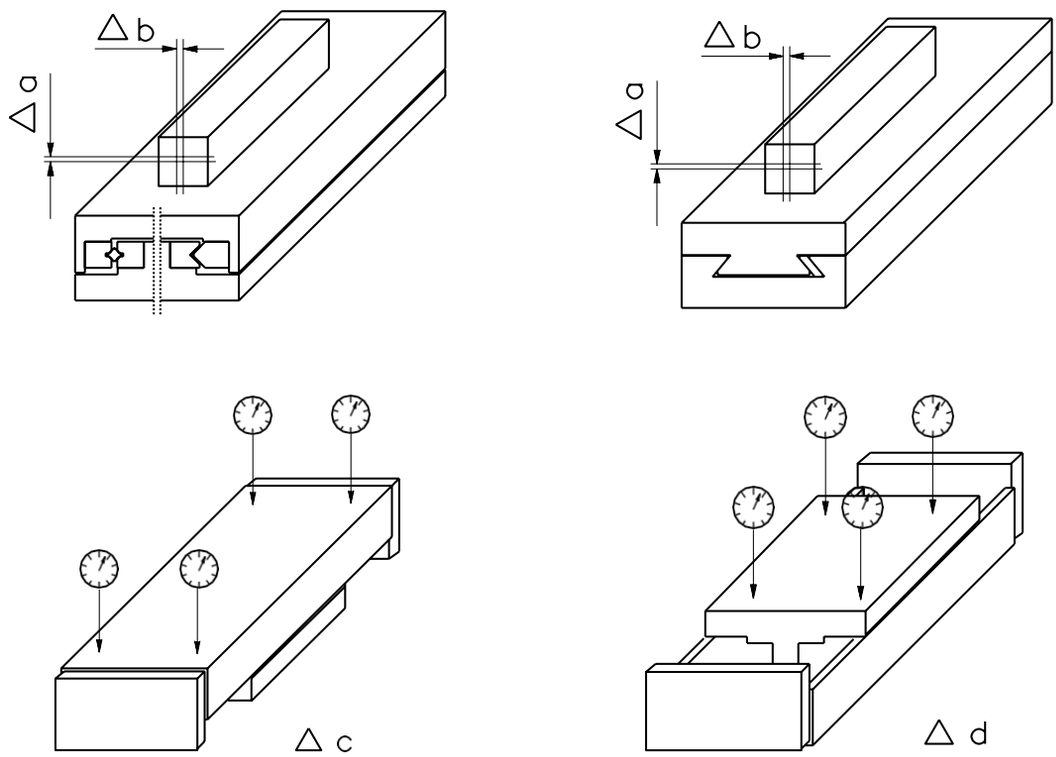

Linear slide execution	Length C to	Stroke B to	Deviations µm			
			a	b	c	d
	100	50	2	3	10	8
	200	100	3	4	12	10
	300	200	5	6	14	12
Cross roller, coated guide and	400	300	6	8	18	14
needle roller-linear slides	500	400	8	10	25	16
	600	500	10	13	30	20
	800	600	12	16	35	25
	1000	700	15	20	40	30
	100	50	3	5	10	10
	200	100	5	8	15	13
	300	200	8	12	18	16
Dovetail	400	300	10	15	23	20
Linear slide	500	400	14	20	30	25
	600	500	18	25	35	30
	800	600	20	30	40	35
	1000	700	23	35	50	40

a + b indicates the running accuracy
c + d indicates the flatness
These values apply to the unloaded and centred linear slide. These values do not apply to the adjustment slide series VS.
For the construction dimensions of the slides, the free size tolerances according to DIN 2768 medium apply. Tighter tolerances on request.

Slides with the same overall height can also be supplied on request. Height tolerance ± 0.01 mm.

We are specialists in our profession for this reason we also manufacture other products in addition to our guide rails and linear slides. On this overview you will get an insight into our wide-ranging products.

HEIGHT AND ANGLE ADJUSTMENT

Classic linear guide movements are not sufficient for many positioning tasks are not enough.
ERO-Führungen also has a wide range to offer in the area of height and angle adjustments, with a wide variety of bearing and drive options, from miniature sizes to systems with several tons.

VARIABLE DRIVE TECHNOLOGY

Each application area has its own special features. Due to the many industries that use linear technology from ERO-Führungen, this results in many specific requirements.
requirements. As a result, the ERO product portfolio has developed over the past decades into a multitude of selection and combination options. As a result, many special requirements can be combined in the standard and are thus much more more economical than new developments.

SPECIAL PROJECTS

In addition to our standard program, we can also design, and manufacture solutions tailored specifically to your needs. Due to a high competence of our construction and production we can realize customer specific projects fast and in highest quality. This makes us a leading manufacturer of special solutions with the highest quality requirements.

ROTARY TABLE TYPE DTA

The DTA rotary table is used for simple manual turning operations.
Through its standard mounting holes
it can be easily installed in existing systems.
The turntable is available in 3 different standard sizes in
Aluminum. Special sizes or other materials are available upon request.
The DTA rotary table is supported with an axial plain bearing
thus, results in a simpler version of the manual rotary table
type MRT.

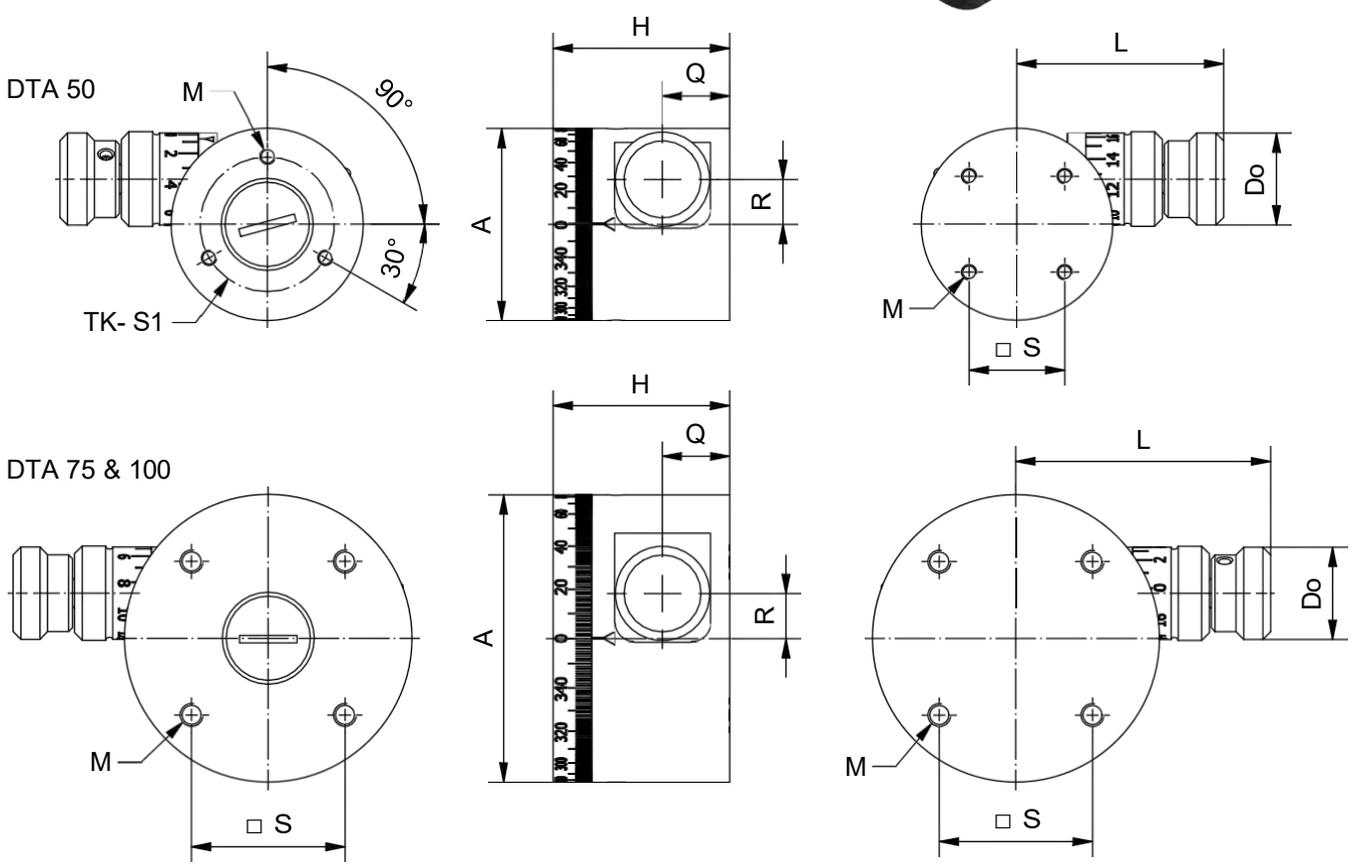

Type	A Rotary plateØ	H Height	Do	L	S	*S1 TK-Ø	M	Q	R	i Ratio	Weight (kg)
DTA	50	46	24	54	25	35	M4	17,5	17,75	20:1	0,27
DTA	75	46	24	66,5	40	-	M5	17,5	11,75	20:1	0,55
DTA	100	50	30	96	45	-	M6	20	0	4:1	1,15

*DTA 50: 3 Threaded holes (subcircle)

TECHNICAL DATA

Executions	MRT = with plain bearing, MRTR = with cross rollers
Material	Standard version grey cast iron EN-GJS-400-15, alternative aluminium. Other materials upon request
Min. & max. diameter	60 - 200 mm (standard), customized size upon request
Coefficient of friction	MRT = 0.07 - 0.2 depending on the load, MRTR = 0.003
Lubrication	MRT = without, MRTR = Rolling bearing grease based on lithium soap, grease nipples available at size 80
Sealing	Upon request
Execution	Surfaces ground, optionally chemically nickel-plated or natural anodized
Mounting hole	Without (standard), customer mounting holes upon request
Maintenance	Low maintenance
Load bearing capacity	The load capacity in the radial direction should not exceed 10% of the axial load (table value). These values apply to the rotary table with a clamped turntable
Special dimensions and materials	Upon request

AREAS OF APPLICATION

- Testing devices
- Laser marking
- Positioning tasks
- And many other

ADVANTAGES ROTARY TABLE TYPE MRT

- Long service life
- Smooth running
- Compact design
- High precision

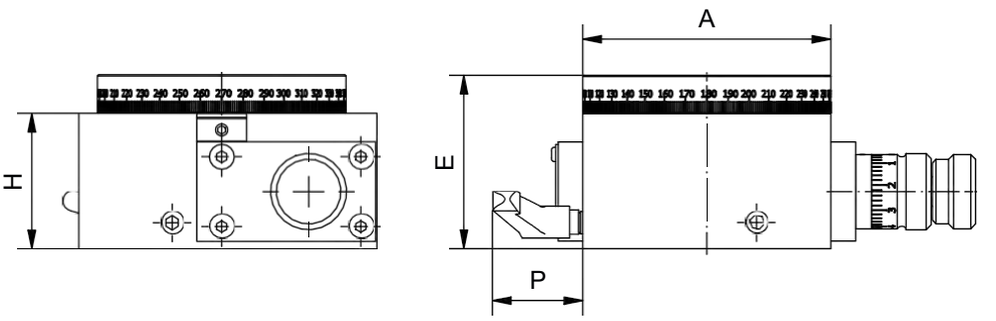

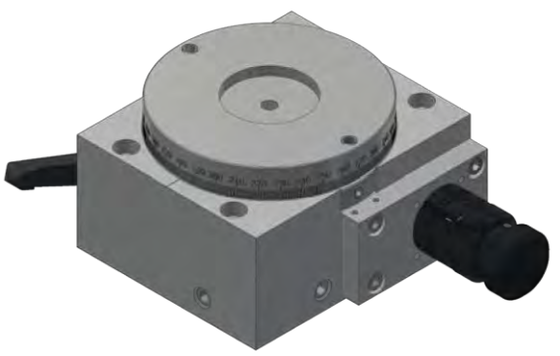

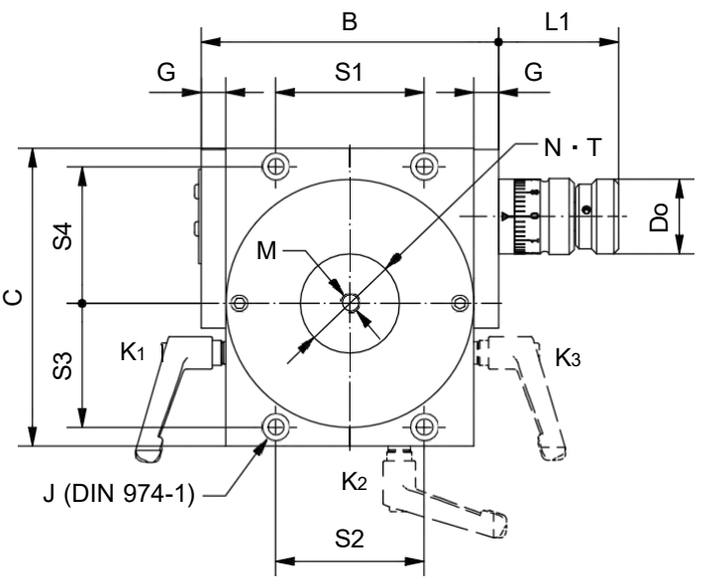

Optionally with handwheel
Clamping on rotary table shaft in positions K1, K2, K3 (option).
Also available with through hole on request.

Other dimensions on request.Load and tilting moments related to plain bearings.

Information on rotary tables with crossed roller bearings (MRTR) on request.

Type		A Ø	B Width	C Length	Do	E Height	H	L1	S1	S2	S3	S4	J	M	ØN H7	T	P	i	stat. Load [N]	dyn. Load [N]	max. mom. [Nm]	Weight (kg)
60																						
MRT	60.80	60	80	92	30	55	44.0	48.5	50	60	34	46	5	M6	25	3	32	90:1	15000	4000	100	2.3
80																						
MRT	80.120	80	120	120	30	65	54.5	48.5	60	60	50	55	6	M6	30	3	36	40:1	27000	7000	200	4.8
MRT	80.120	80	120	120	30	65	54.5	48.5	60	60	50	55	6	M6	30	3	36	90:1	27000	7000	200	4.8
100																						
MRT	100.120	100	120	120	30	70	54.5	48.5	60	60	50	55	6	M8	40	5	36	40:1	27000	7000	200	5.3
MRT	100.120	100	120	120	30	70	54.5	48.5	60	60	50	55	6	M8	40	5	36	90:1	27000	7000	200	5.3
150																						
MRT	150.170	150	170	170	48	75	58.5	69.0	130	130	65	65	8	M10	50	5	36	40:1	27000	7000	200	12.5
MRT	150.170	150	170	170	48	75	58.5	69.0	130	130	65	65	8	M10	50	5	36	90:1	27000	7000	200	12.5
200																						
MRT	200.224	200	224	224	48	90	65.0	69.0	150	150	95	95	10	M12	60	5	46	40:1	50000	15000	800	24.5
MRT	200.224	200	224	224	48	90	65.0	69.0	150	150	95	95	10	M12	60	5	46	90:1	50000	15000	800	24.5

A = Ø-Rotary table, i = Ratio
We also have motorized rotary tables in our portfolio. For more information vertrieb@ero-fuehrungen.de

TECHNICAL DATA

Material	Standard version grey cast iron EN-GJS-400-15, alternative aluminium other materials upon request
Size	30 – 300 mm (standard). Special dimensions upon request
Lubrication	Usual commercial guideway oils, from size 75, lubrication connections and lubrication grooves are included as standard
Slide execution	Surfaces ground, optionally chemically nickel-plated or natural anodized
Mounting hole	Without (standard), optionally with standard mounting holes or customer mounting holes
Spindle design	Ground metric standard spindles 1 graduation = 0.001 mm stroke 1 turn = 0.05 mm stroke (from slide width 200 mm 1 turn = 0.1 mm stroke)
Pitch accuracy	+/- 0.02 mm on 300 mm length
Maintenance	Low maintenance
Special dimensions and materials	Upon request

AREAS OF APPLICATION

- Positioning systems of all kinds
- Setting of measuring setups
- Setting of assembly units
- And many other

ADVANTAGES PRECISION Z STAGE TYPE SMH

- Long service life
- High loads moveable
- Smooth movement
- Highest precision

STANDARD DRILLING PATTERN (OPTIONAL)

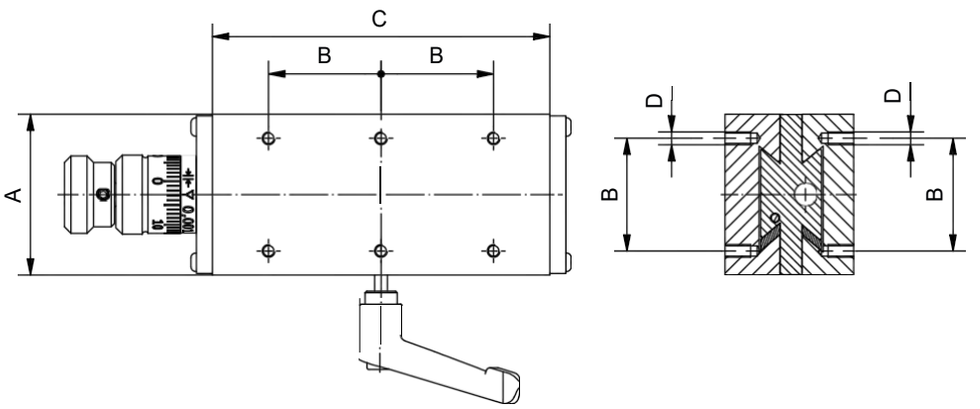

Standard Drilling Pattern		
A	B	D
30	22	M3
50	35	M4
75	50	M5
100	70	M6
150	120	M8
200	160	M10
300	260	M12

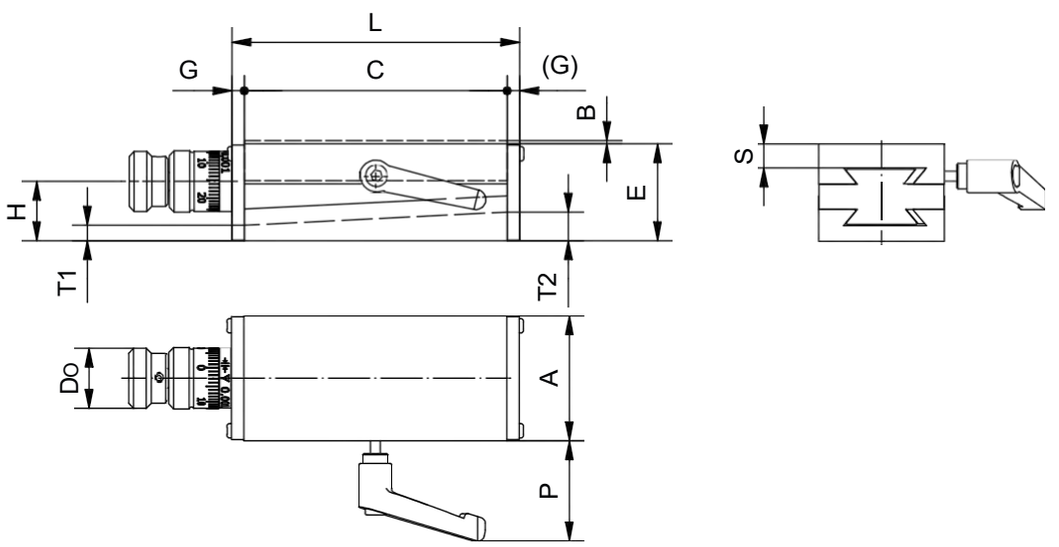

T-slots are possible on request. Please inquire.

Type		A Width	C Length OT/UT	B Stroke	E Height without Stroke	L	G	H	S	T1* min.	T2* max.	Do	P	Spindle	F Pressure [N] dynamical	F lateral [N] dynamical	Weight (kg)
30																	
SMH	30.065.1.00	30	65	1.00	29.00	71	3	16.00	5.4	4.4	7.6	Ø14	38	M3x0.5	365	123	0.4
50																	
SMH	50.105.1.25	50	105	1.25	38.75	115	5	23.75	9.5	6.2	11.5	Ø24	40	M6x1	968	344	1.5
75																	
SMH	75.130.1.75		130	1.75	48.25	142	6	30.25	9.5	7.7	14.2	Ø30	40	M8x1	1615	555	3.5
SMH	75.155.5.00	75	155	5.00	47.50	167	6	29.50	9.5	7.0	20.0	Ø30	40	M8x1	1615	555	4.0
100																	
SMH	100.160.2.50		160	2.50	60.00	178		33.00	14.0	6.0	14.0				2453	1062	6.7
SMH	100.160.5.00		160	5.00	72.00	178		40.00	14.0	6.0	22.0				2453	1062	8.0
SMH	100.210.10.00	100	210	10.00	80.00	228	8	48.00	14.0	14.0	35.0	Ø30	42	M12x1	2453	1062	11.0
SMH	100.210.20.00		210	20.00	135.00	228		74.50	24.0	26.0	78.5				2349	1255	20.0
150																	
SMH	150.210.2.50	150	210	2.50	85.00	230	10	51.00	16.0	15.0	25.5	Ø48	40	M16x1	5512	2128	19.5
SMH	150.260.5.00	150	260	5.00	85.00	280	10	51.00	16.0	15.0	28.0	Ø48	40	M16x1	5560	2128	22.6
200																	
SMH	200.260.2.50		260	2.50	95.00	284		57.00		16.0	29.0				8138	3297	36.0
SMH	200.310.5.00	200	310	5.00	115.00	334	12	77.00	17.0	36.0	51.5	Ø48	50	M20x2	8138	3297	50.0
SMH	200.310.10.00		310	10.00	115.00	334		77.00		16.0	47.0				8138	3297	49.0
300																	
SMH	300.410.5.00	300	410	5.00	120.00	440	15	72.00	25.0	19.0	39.5	Ø68	50	M20x2	16198	5425	104.6
SMH	300.410.10.00	300	410	10.00	120.00	440	15	72.00	25.0	14.0	44.5	Ø68	50	M20x2	14421	4380	101.0

Reading accuracy up to and including size 150 = 0.001 mm. From size 200 = 0.002 mm
*Thickness varies due to slope UT

TECHNICAL DATA

Material	Standard version grey cast iron EN-GJS-400-15, alternative aluminium other materials upon request
Min. & max. width	75 – 200 mm (standard) special dimensions on request
Coefficient of friction	0.003
Lubrication	Rolling bearing grease based on lithium soap
Rolling elements	Roller with Ø3 mm
Slide execution	Surfaces ground, optionally chemically nickel-plated or natural anodized
Mounting hole	Without (standard), optionally with standard mounting holes or customer mounting holes
Spindle execution	With micrometer, thread pitch 0.5 mm, reading accuracy 0.01 mm
Pitch accuracy	3 µm over the entire stroke
Load-bearing capacity and weight	See table on p.69
Maintenance	Low maintenance
Special dimensions and materials	Upon request

AREAS OF APPLICATION

- Positioning systems of all kinds
- Adjustment of measuring optics
- Setting of laser systems
- and many other

ADVANTAGES XY-STAGE TYPE RQ

- Long service life
- No backlash due the built-in return spring
- Smooth running
- Low height
- Highest precision

Type RQM XY X-axis left mounted

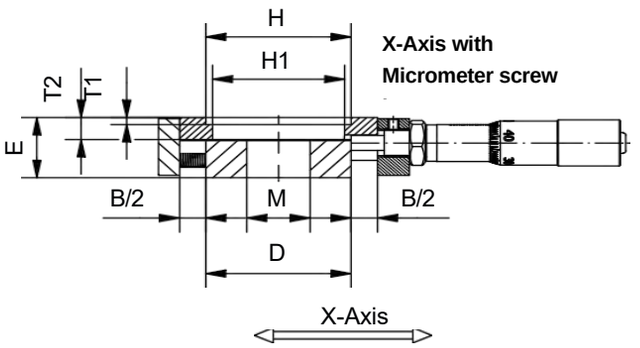

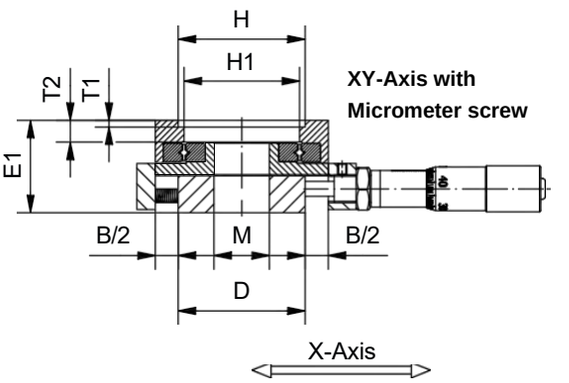

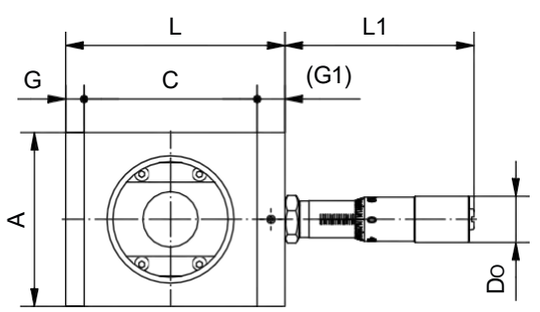

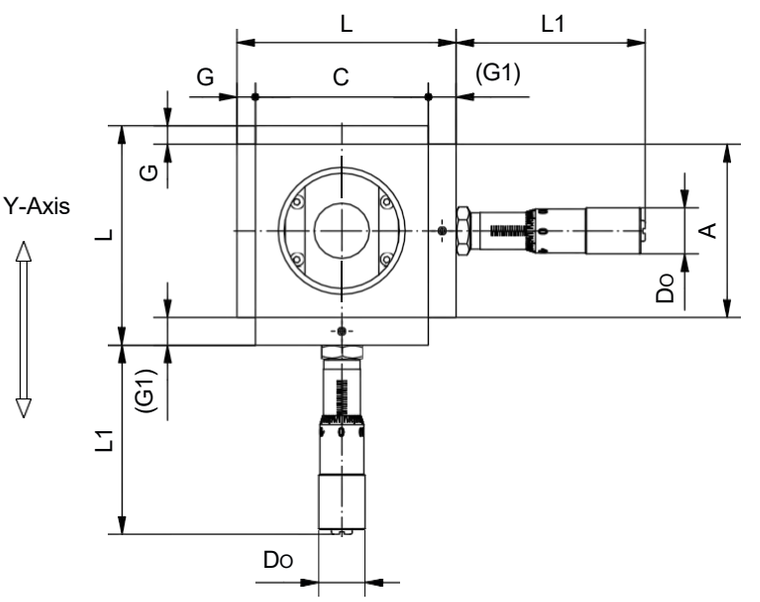

Typ		Axes	A Width	C Length OT	B Stroke	D Length UT	E	E1	L	L1 min.	L1 max.	G	G1	H	H1	Do	M	T1	T2	F1 dyn [N]
75																				
RQ	75.75.20	X | XY	75	75	20	55	26	40	91	-	-	8	12	55	50	20	24	3	10	462
RQM	75.75.20	X | XY	75	75	20	55	26	40	95	72	92	8	12	55	50	20	24	3	10	462
100																				
RQ	100.100.20	X | XY	100	100	20	80	26	40	116	-	-	8	12	80	75	20	46	3	10	792
RQM	100.100.20	X | XY	100	100	20	80	26	40	120	72	92	8	12	80	75	20	46	3	10	792
150																				
RQ	150.150.45	X | XY	150	150	45	105	32	50	170	-	-	10	15	105	100	20	70	3	12	990
RQM	150.150.45	X | XY	150	150	45	105	32	50	175	95	140	10	15	105	100	20	70	3	12	990
200																				
RQ	200.200.45	X | XY	200	200	45	155	32	50	220	-	-	10	15	130	125	20	110	3	12	1650
RQM	200.200.45	X | XY	200	200	45	155	32	50	225	95	140	10	15	130	125	20	110	3	12	1650

All listed sizes mounted with cross roller rails size R3. Reading accuracy 0.01 mm. Micrometer screw of X-Axis can also be mounted on the left.

Typ		Axes	*Weight (kg)			
			RQ X	RQM X	RQ XY	RQM XY
75						
RQ	75.75.20	X | XY	0.8	-	1.4	-
RQM	75.75.20	X | XY	-	1.1	-	1.8
100						
RQ	100.100.20	X | XY	1.3	-	2.1	-
RQM	100.100.20	X | XY	-	1.6	-	2.5
150						
RQ	150.150.45	X | XY	3.6	-	6.0	-
RQM	150.150.45	X | XY	-	4	-	6.6
200						
RQ	200.200.45	X | XY	6.0	-	10.0	-
RQM	200.200.45	X | XY	-	6.5	-	11.0

Standard Drilling Patern			
A	B	E	D
75	26	45	M5
100	40	65	M6
150	58	85	M8
200	115	105	M10

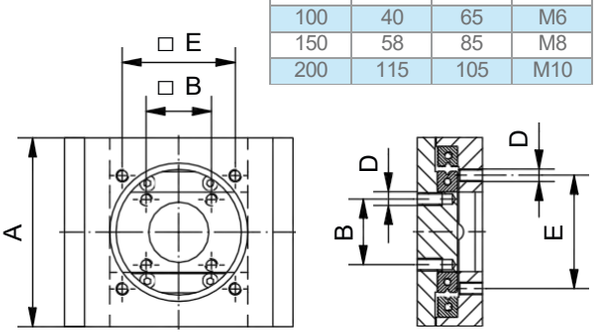

* Slide also possible without transmitted light opening, weight indication with transmitted light opening.

TECHNICAL DATA

Material	Aluminium black anodized (standard), other materials on request, also available with planetary gear on request
Size	40 mm (standard), special dimensions on request
Lubrication	Usual commercial guideway oils
Slide execution	Surfaces ground, optionally other anodized colours
Mounting hole	With standard mounting, optionally customer mounting holes or without
Transmissions	1:1, 4:1, 14:1, other on request
Maintenance	Low maintenance

AREAS OF APPLICATION

- Positioning system of all kinds
- Setting of measuring optics
- Setting of welding head
- And many other

ADVANTAGES
RACK AND PINION DRIVE TYPE SZA

- Long service life
- Easy preload adjustment with conical feed rail
- Very good vibration damping
- High precision

Type SZA 40.160.080 with planetary gear

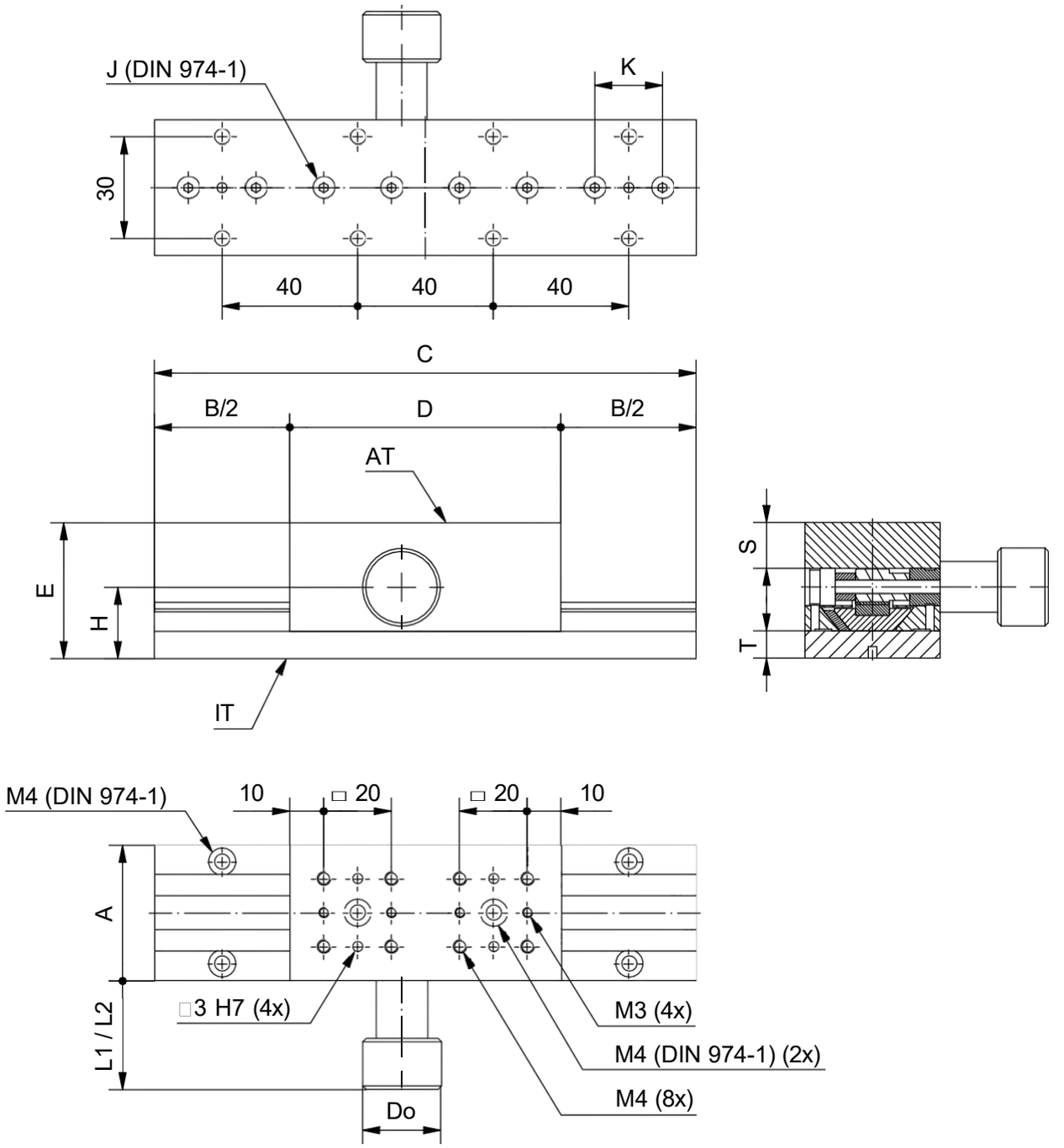

Type		A Width	B Stroke	C Length IT	D Length AT	H	Do	E Height	L1	*L2	J	K	S	T	i Ratio
SZA	40.110.040		40	110	70		Ø23		32	-					1:1
SZA	40.110.040		40	110	70		Ø30		-	39					4:1
SZA	40.110.040		40	110	70		Ø30		-	39					14:1
SZA	40.160.080		80	160	80		Ø23		32	-					1:1
SZA	40.160.080	40	80	160	80	21	Ø30	40	-	39	M4	20	13.5	8	4:1
SZA	40.160.080		80	160	80		Ø30		-	39					14:1
SZA	40.200.120		120	200	80		Ø23		32	-					1:1
SZA	40.200.120		120	200	80		Ø30		-	39					4:1
SZA	40.200.120		120	200	80		Ø30		-	39					14:1

* L2 = Linear dimension for planetary gear units
Load data on request

TECHNICAL DATA

Material	With ground cross roller guides = Type GONR Material: Sliding parts grey cast iron EN-GJS-400-15 standard other material upon request
Min. & max. width	60 - 100 (standard). special dimensions upon request
Coefficient of friction	0.003 (with cross rollers)
Lubrication	Rolling bearing grease based on lithium soap
Rolling elements	Roller, Ø2 and Ø3 mm
Slide execution	Goniometer stages are available in different executions: ■ With ground cross roller guides: GONRO. GONRM Surfaces ground. optionally chemically nickel-plated ■ With milled dovetail profile: GONSO. GONSM Surfaces ground. optionally chemically nickel-plated ■ With sintered dovetail profile (plastic): GONSOPA. GONSMPA
Mounting hole	Without (standard). optionally with customer mounting holes
Spindle execution	GONRO without Spindle. GONRM with spindle and micrometer screw GONSO without Spindle. GONSM with spindle and micrometer screw GONSOPA without Spindle. GONSMPA with spindle and micrometer screw
Maintenance	Low maintenance
Special dimensions and materials	Upon request

AREAS OF APPLICATION

- Angle adjustments
- Measurement technology
- optical adjustment
- and many other

ADVANTAGES STAGE SERIES GON

GONRO / GONRM

- Long service life
- Smooth running
- Coefficient of friction 0.003
- Swivel angle adjustment without shifting the focus point

GONSO / GONSM

- Long service life
- Very good vibration damping
- Swivel angle adjustment without shifting the focus point

GONSOPA / GONSMPA

- Long service life
- Low weight
- Very good emergency running characteristics
- Swivel angle adjustment without shifting the focus point

Goniometer Stage Type GONRO

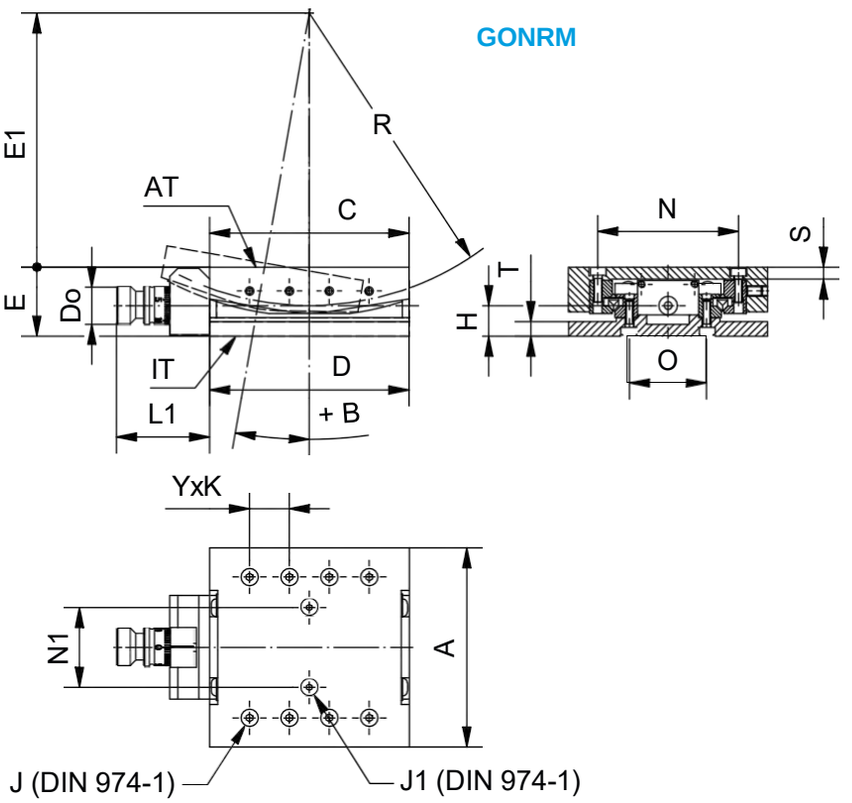

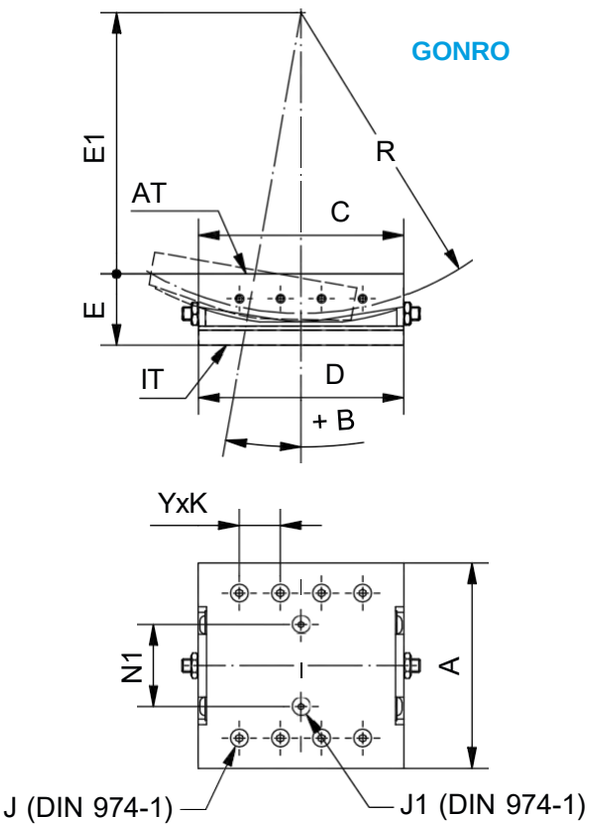

GONRM = with threaded spindle. All basic dimensions can be found in the GONRO table.

Type		Do	L1	H	Spindle	Weight (kg)
60						
GONRM	60.60.±5°R70					0.46
GONRM	60.60.±5°R87					0.46
GONRM	60.60.±5°R103	Ø14	35	10.5	M3x0.5	0.46
GONRM	60.60.±5°R120					0.46
75						
GONRM	75.75.±10°R85	Ø14	35	11.5	M3x0.5	0.80
GONRM	75.75.±10°R110	Ø14	35	11.5	M3x0.5	0.80
100						
GONRM	100.100.±10°R125	Ø14	35	13.5	M3x0.5	1.65
GONRM	100.100.±10°R160	Ø14	35	13.5	M3x0.5	1.65

Rail size: width 60 = 2; from width 75 = 3

There are more versions available.

GONSO/GONSM:
milled dovetail guides made of grey cast iron.
Advantages: very good vibration damping due to high static and sliding friction.

GONSOPA/GONSMPA:
Sintered dovetail guide made of PA6.
Advantages: low weight and good emergency running properties.

Type		A Width	C Length AT	B Pivot-Angle	D Length IT	R Radius	E Heigth	E1	J	J1	YxK	N	N1	O	S	T	Weigth (kg)
60																	
GONRO	60.60.±5°R70					70		59.5			4x12.5						0.42
GONRO	60.60.±5°R87					87		76.5			4x12.5						0.42
GONRO	60.60.±5°R103	60	60	±5°	60	103	24	92.5	M2.5	M3	4x13.0	47	30	27	4.5	5.5	0.44
GONRO	60.60.±5°R120					120		109.5			4x13.0						0.44
75																	
GONRO	75.75.±10°R85	75	75	±10°	75	85	26	70.5	M3	M3	4x15.0	53	30	29	4.5	5.5	0.76
GONRO	75.75.±10°R110	75	75	±10°	75	110	26	95.5	M3	M3	4x15.0	53	30	29	4.5	5.5	0.76
100																	
GONRO	100.100.±10°R125	100	100	±10°	100	125	35	103.5	M3	M3	5x15.0	78	30	54	6.5	7.5	1.62
GONRO	100.100.±10°R160	100	100	±10°	100	160	35	138.5	M3	M3	5x15.0	78	30	54	6.5	7.5	1.62

Rail size: width 60 = 2; from width 75 = 3

ADJUSTMENT SLIDE TYPE VS

The ERO adjustment slides of the VS series are dovetail slides made of aluminium with maximum strokes (in the standard version) of 5 – 75 mm (depending on the size), which are manufactured in one, two or three-axis versions. The adjustment slides are available in 4 different types.

AREAS OF APPLICATION

- Positioning of all kinds
- Measuring optics
- Mounting devices
- Also simple adjustments

Type VSLS 50 XYZ

MATERIAL AND SLIDE VERSION

Standard version natural anodized aluminium.
Stainless steel spindles. End plates chemically nickel-plated.
Fixing screws corrosion resistant.
Other materials on request. Repeatability 0.05 mm.
All slides with mounting holes.
Other coatings and surfaces on request.

ADVANTAGES ADJUSTMENT SLIDE TYPE VS

- Smooth movement
- Precise
- Simple and compact design
- Stable
- Very light
- Corrosion protected
- Available in other anodizing colours

Size	Load Capacity in N	Weigth in g				Spindle	Stroke	Reading accuracy
		X	XY	YZ	XYZ			
VS 10	3	6	10	11	15	M3 x 0.5	5	0.05
VS 20	20	40	80	100	150	M4 x 0.5	10	0.02
VS 30 / VSL 30	48	60	100	150	200	M6 x 1	15	0.05
VSS 30 / VSLS 30						M3 x 0.5	15	0.01
VS 50 / VSL 50	149	300	500	600	900	M6 x 1	25	0.05
VSS 50 / VSLS 50								0.02
VS 75 / VSL 75	250	700	1200	1500	2000	M6 x 1	50	0.05
VSS 75 / VSLS 75								0.02
VS 100 / VSL 100	441	1600	2600	3500	4600	M8x 1	75	0.05
VSS 100 / VSLS 100								0.01

TYPE VS STANDARD VERSION

TYPE VSS WITH REINFORCED SPINDLE BEARING

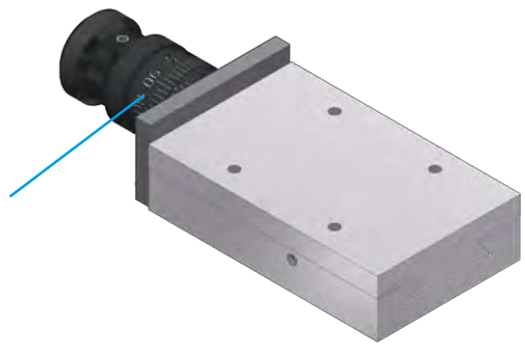

TYPE VSL WITH CONICAL FEED RAIL

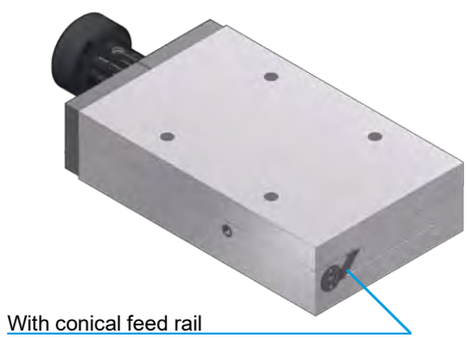

TYPE VSLS WITH CONICAL FEED RAIL & REINFORCED SPINDLE BEARING

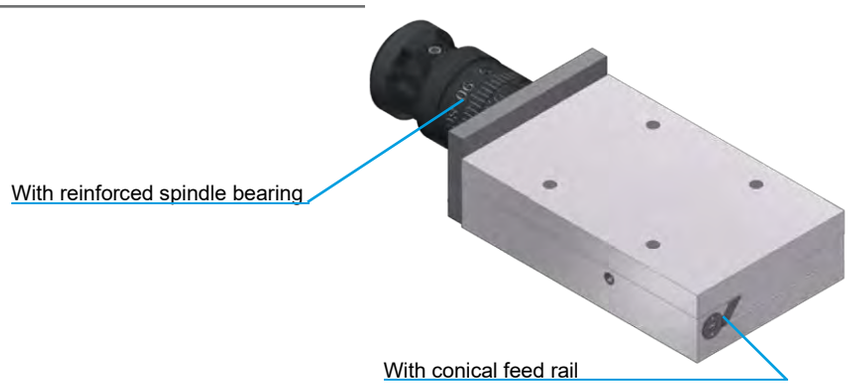

X

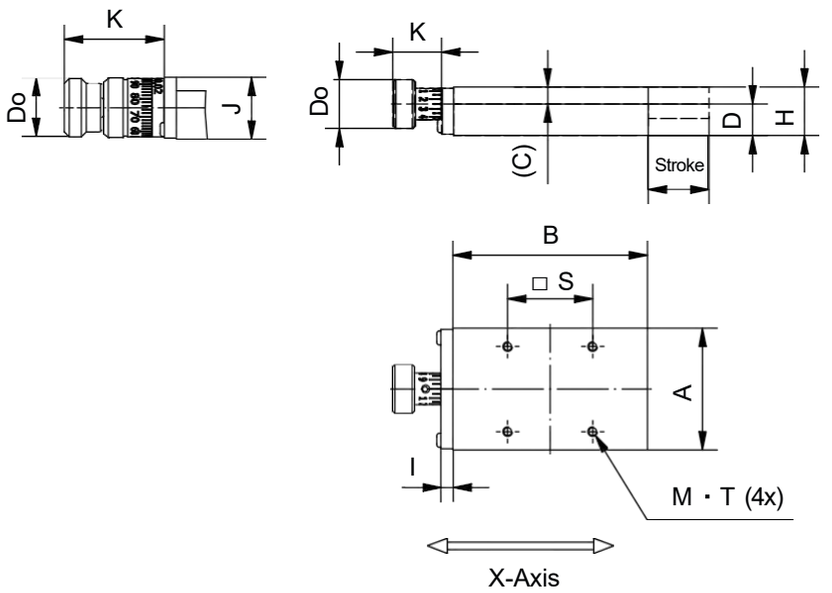

YZ

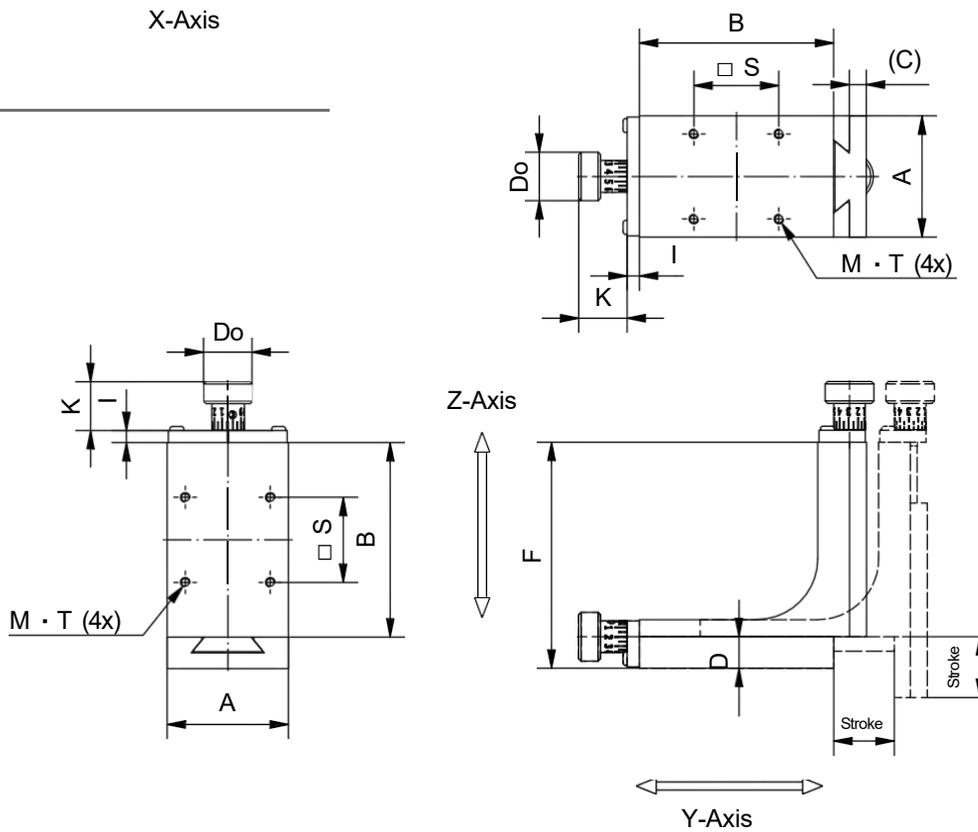

TECHNICAL DATA

Size	A	B	C	D	Stroke	E	F	G	H	J	I	K	Do	S	M	T
VS 10	10	15	3	5	5	16	20	28	8	7.75	2	8	6	6	M2	3
VS 20	20	30	5	8	10	22	38	47	13	12.5	3	15	14	12	M3	5
VS 30 / VSL 30	30	40	6	9	15	25	49	59	15	14.5	3	17	15	15	M3	6
VSS 30 / VSLS 30										15.5		23	14			
VS 50 / VSL 50	50	80	7	13	25	33	93	106	20	19.5	5	20	20	35	M4	7
VSS 50 / VSLS 50										25.5		41	24			
VS 75 / VSL 75	75	105	10	15	50	40	120	135	25	24.5	5	25	25	50	M5	10
VSS 75 / VSLS 75										27.0		41	24			
VS 100 / VSL 100	100	160	12	18	75	48	178	196	30	29.0	6	25	25	70	M6	12
VSS 100 / VSLS 100										33.0		48	30			

XY

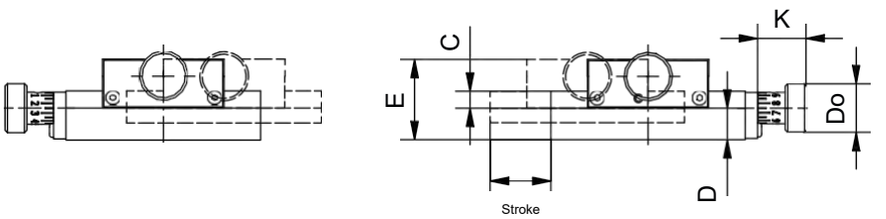
K
C
E
Do
D
Stroke

A

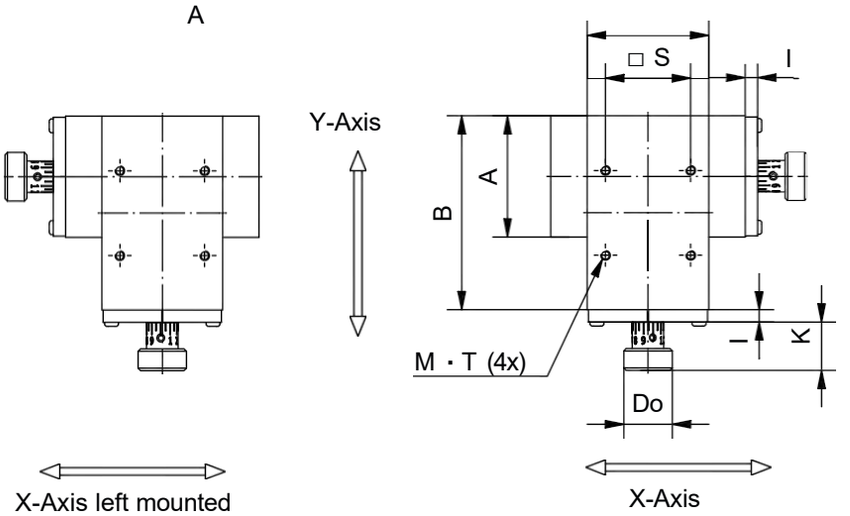
□ S
I
Y-Axis
A
B
M · T (4x)
I
K
Do
X-Axis left mounted
X-Axis

XYZ

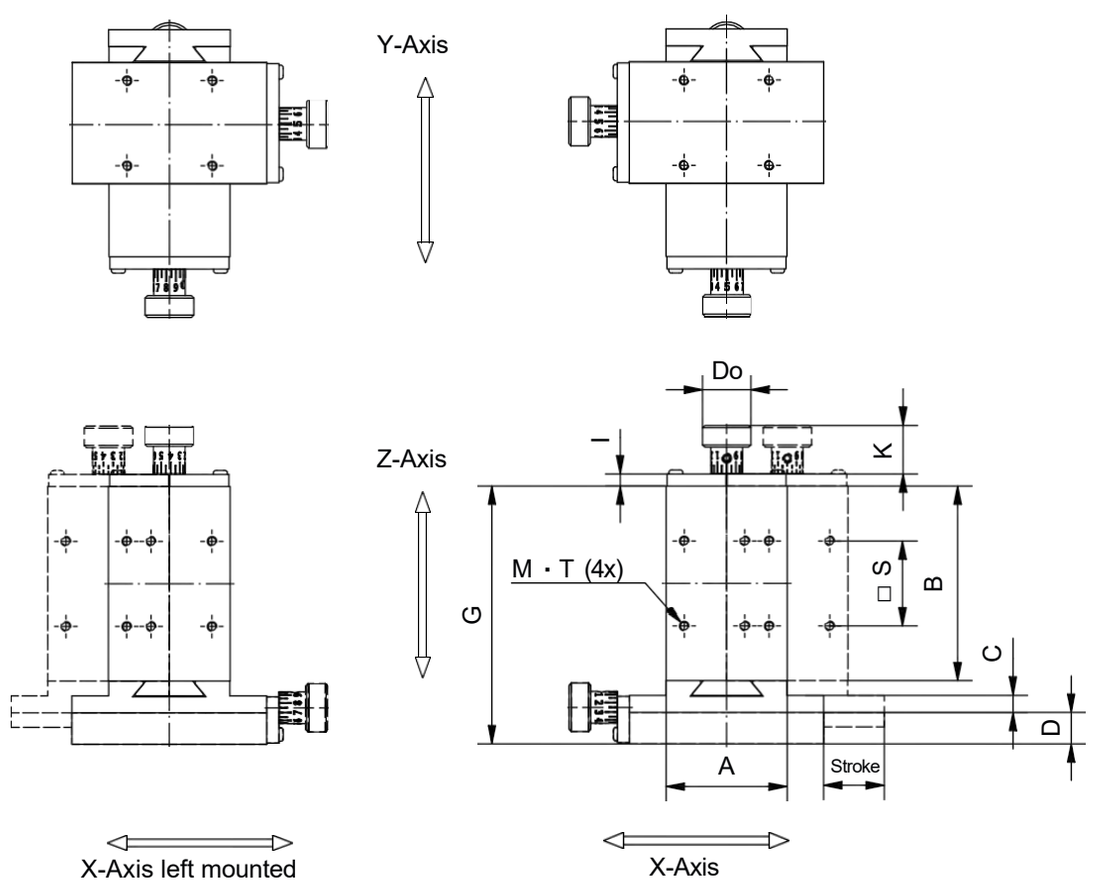
Y-Axis
Do
I
K
Z-Axis
M · T (4x)
□ S
B
G
C
D
A
Stroke
X-Axis left mounted
X-Axis

COUNTLESS POSSIBILITIES

Our modular system offers countless possibilities.
Also for the clapming.

In this illustration you can see the different possibilities to combine our VS adjustment slides.

The clamping possibilities are described on the right side.

The X-axis can also be mounted on the left side if desired.

Clamping elements can partly also be mounted on the left side.

Possible special options:

- Slide parts individually long
- Cast iron / stainless steel version
- Other anodized colours

For special requests, we are pleased to be your contact.

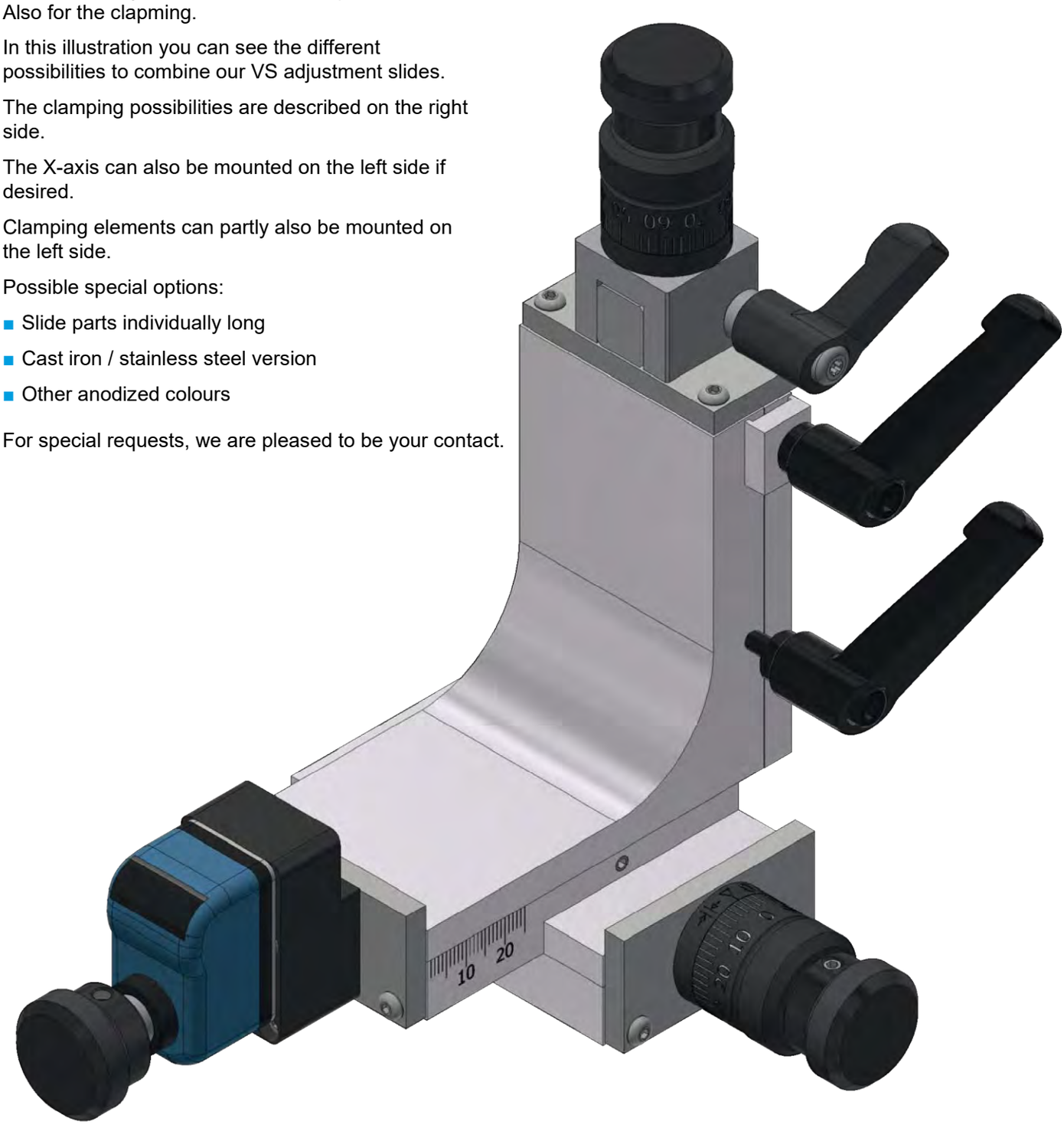

MOTORIZED VERSION

A motorized version of our adjustment slides (type MVSLS) is possible from size 30 and in all axis variants.

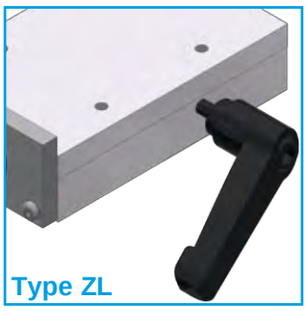
Type ZL

◀ CLAMPING TYPE ZL

ZL = with clamping via clamping lever on feed bar/dovetail profile

VSL & VSLS right side only (bar)
VS & VSS on both sides from size 30 onwards
only for X-. YZ version

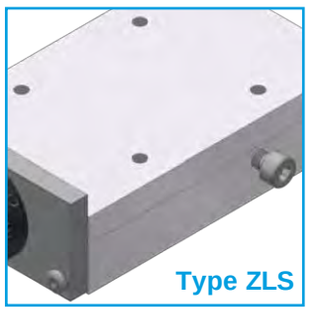
Type ZLS

◀ CLAMPING TYPE ZLS

ZLS = with clamping via screw on
Feed strip/dovetail profile

VSL & VSLS right side only (strip)
VS & VSS on both sides from size 30 onwards
only for X-. YZ version

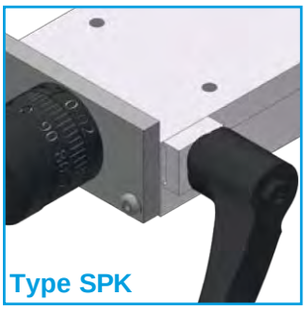
Type SPK

CLAMPING TYPE SPK ▶

SPK = with clamping via clamping claws
and clamping lever

from size 30 (only X & YZ possible)
from size 50 (all axes)

CLAMPING TYPE SPS ▶

SPS = with clamping via clamping claws and screw

from size 30

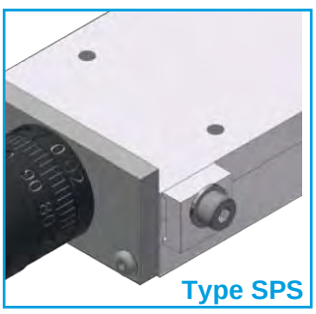
Type SPS

Type SKL

◀ CLAMPING TYPE SKL / SKS

SKL = Spindle clamping via clamping lever
SKS = Spindle clamping via screw

From size 30
only for VSS and VSLS

CLAMPING TYPE F ▶

F = Clamping via screw on locking plate

Size 10 & 20

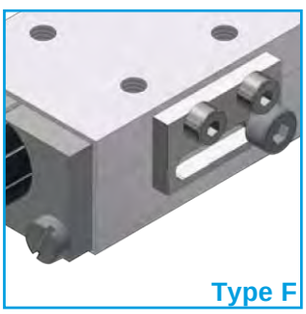
Type F

OPTIONS CLAMPS ADJUSTMENT SLIDE
SIZE CHART

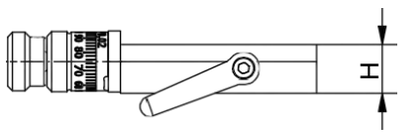

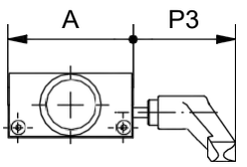

ZL = with clamping lever on feed rail

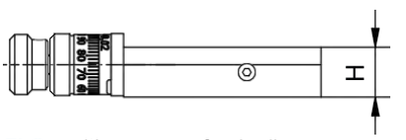

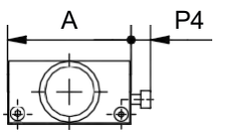

ZLS = with screw on feed rail

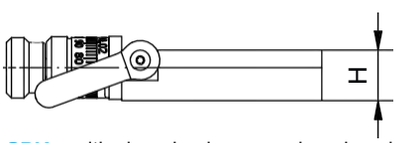

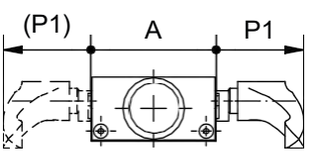

SPK = with clamping lever on clamping claw

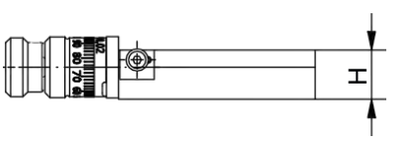

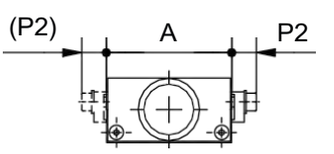

SPS = with screw on clamping claw

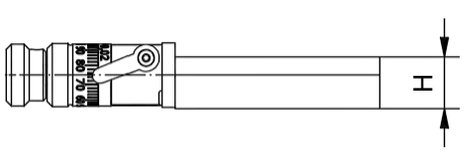

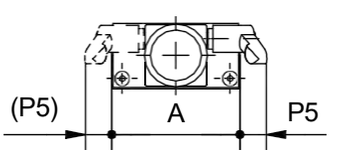

SKL = with spindle clamping

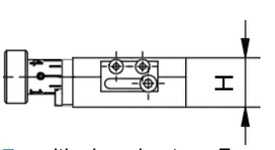

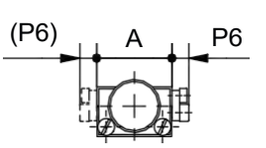

F = with clamping type F

Type	A Width	H Height	P1 SPK	P2 SPS	P3 ZL	P4 ZLS	P5 SKL	P6 F	Do
10									
VS | VSL	10		-	-	-	-	-	4	Ø6
20									
VS | VSL	20		-	-	-	-	-	4	Ø14
30									
VS | VSL	30	9	28	9	27	6	16	-	Ø15
VSS | VSLS	30	9	28	9	27	6	16	-	Ø14
50									
VS | VSL	50	13	35	10	38	7	11	-	Ø20
VSS | VSLS	50	13	35	10	38	7	11	-	Ø24
75									
VS | VSL	75	15	36	11	34	8	-2	-	Ø25
VSS | VSLS	75	15	36	11	34	8	-2	-	Ø24
100									
VS | VSL	100	18	41	12	36	11	1	-	Ø25
VSS | VSLS	100	18	41	12	36	11	1	-	Ø30

OPTION SCALE

The numbers indicate the possible engravings.

1 = from 0 to max stroke

2 = from max stroke to 0

3 = -1/2 stroke to +1/2 stroke

4 = 1 rotated by 180

5 = 2 rotated by 180

6 = 3 rotated by 180

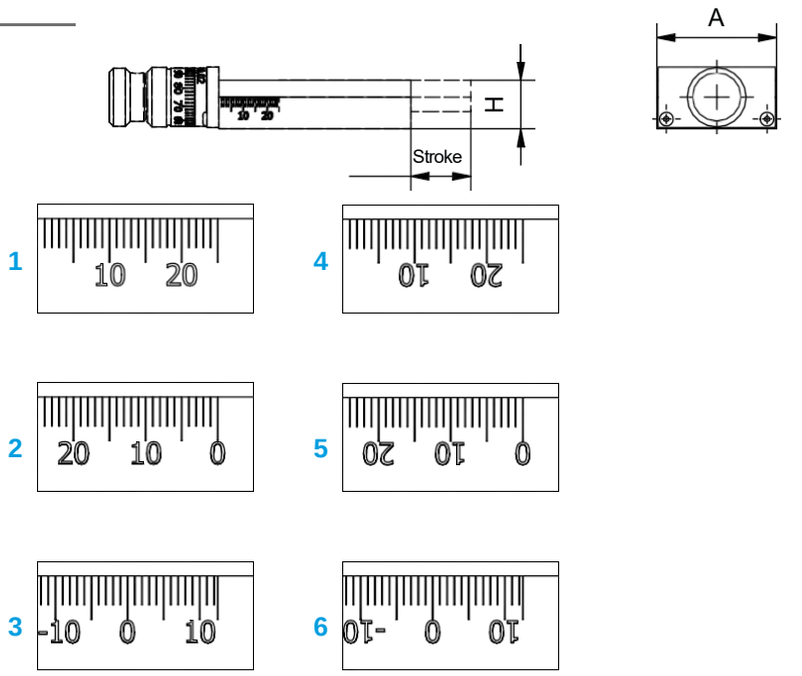

OPTION POSITION INDICATOR

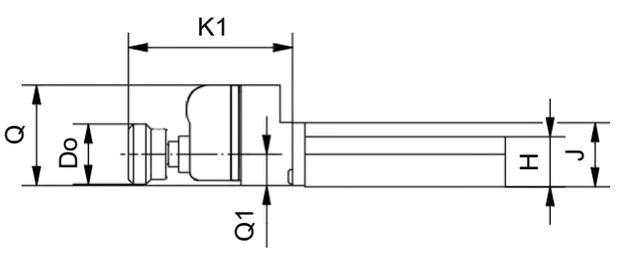

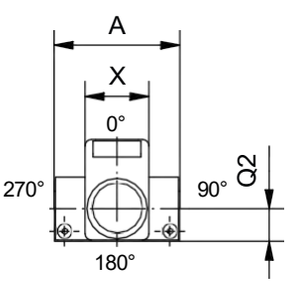

Position indicator mountable in 4 mounting positions. Standard 0°

K1 PA	J	Spindle	Position Indicator	*Display after 1 turn	X	Q	Q1	Q2
-	-	M3x0.5	-	-	-	-	-	-
-	-	M4x0.5	-	-	-	-	-	-
47.0	15.0	M6x1	EOP2	01.0	25.4	38	10.5	9
46.0	18.5	M3x0.5	EOP2	00.5	23.0	38	10.5	9
50.0	20.0	M6x1	EOP2	01.0	25.4	38	10.5	13
65.5	25.5	M6x1	EOP2	01.0	25.4	40	12.5	13
55.0	25.0	M6x1	EOP2	01.0	25.4	38	10.5	15
66.0	27.0	M6x1	EOP2	01.0	25.4	40	12.5	15
65.0	30.0	M8x1	EOP3	01.0	32.0	46	16.5	18
74.0	33.0	M8x1	EOP3	01.0	32.0	46.5	16.5	18

* Digital position indicators on request.

ROTARY PLATE TYPE DTVS

Rotary plates can be used for all VS series adjustment slides.

The rotary plates can be rotated through 360°.

Scale graduation 1°. Readable to the left and right by 90° each.

Clamping is by means of clamping levers.

Standard with hole pattern and clamping on the right.

Clamping via clamping lever or screw possible.

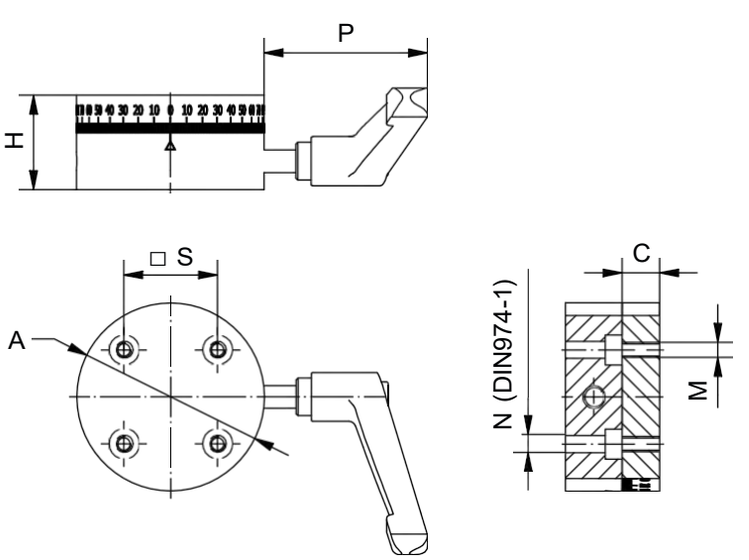

Type	A Rotary plate-Ø	H Height	S	C	M	N	P	Weight (kg)
DTVS	30	15	15	5	M3	M3	10	0.03
DTVS	50	25	25	10	M4	M4	45	0.18
DTVS	75	25	40	10	M5	M5	36	0.34
DTVS	100	25	60	10	M6	M6	40	0.56

For rotary plate size 30 clamping only possible with screw

CURVED GUIDE TYPE BS

The motorized curved guide is designed for positioning tasks, handling and machining tasks. A circular curved dovetail profile forms the bearing of the system. It is driven by a backlash-free tooth belt.

Swivel angle and arc radius upon request.
Optionally a spindle drive is possible.

e. G. Swivelling angle of +/- 17.5°

AREAS OF APPLICATION

- Positioning of optical devices with precise programmable swivelling angle
- Setting of measuring setups
- Handling tasks
- Easy machining tasks

For more information, please visit our website at
www.ero-fuehrungen.de or contact us directly at vertrieb@ero-fuehrungen.de

MACHINE TABLE

Machine table for any application. Lacquered in standard RAL colours on request.
Table surface ground. The base plate and the machine stand can be ordered separately.
It is available in three different sizes.

On request different special versions are possible, please contact us.

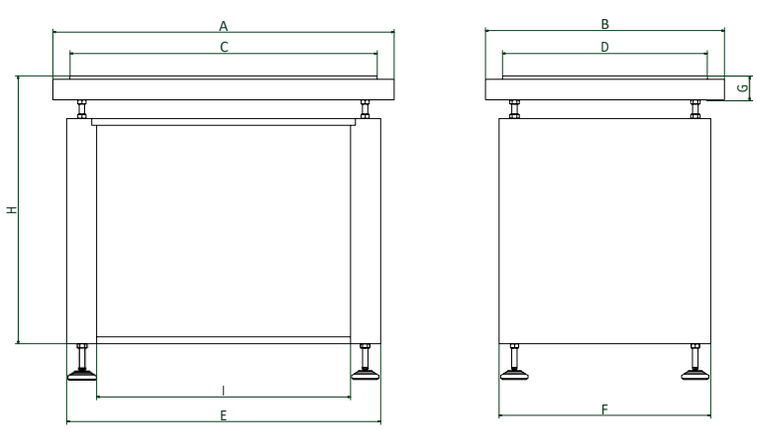

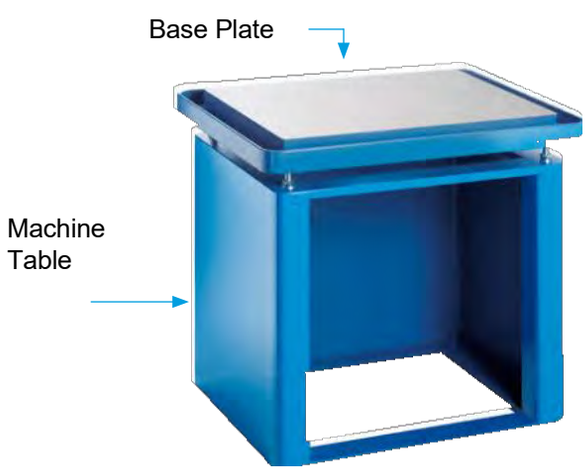

Type	A	B	C	D	E	F	G	H	I
1	700	510	630	440	645	455	30	850	510
2	820	660	700	550	750	590	60	720	490
3	1000	700	900	600	920	620	70	720	690

OVERVIEW MOTORIC LINEAR SLIDE TYPE MOTS, TYPE MONO, TYPE MOKS, TYPE MOS, TYPE MOLS

MOTORIC LINEAR SLIDE TYPE MOTS

p. 86

- Guided by coated rails
- Very good vibration damping
- Insensitive to dirt
- Very good emergency running properties
- Good absorption of transverse forces

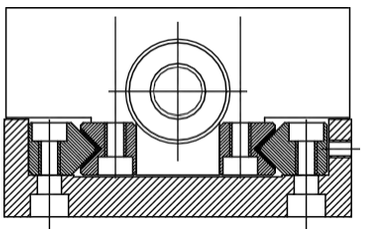

MOTORIC LINEAR SLIDE TYPE MONO

p. 87

- Guided by needle roller rails
- Smooth running
- Minimal wear
- Zero backlash
- Stick-slip free running
- High load capacity
- High speed + acceleration

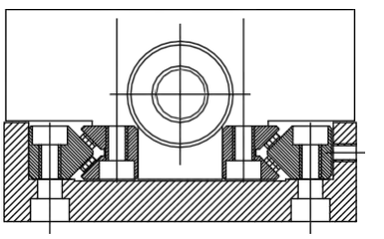

MOTORIC LINEAR SLIDE TYPE MOKS

p. 88

- Guided by cross roller rails
- High travel speed
- Smooth movement
- Coefficient of friction 0.003
- Highest precision
- Stick-slip free running

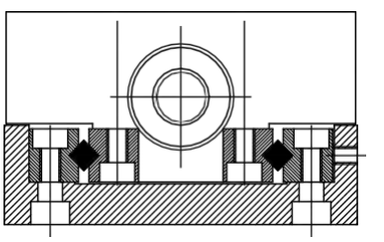

MOTORIC LINEAR SLIDE TYPE MOS

p. 89

- Guided by dovetail
- Easy clearance adjustment due to conical feed rail
- Very good vibration damping
- Very good emergency running properties with coating

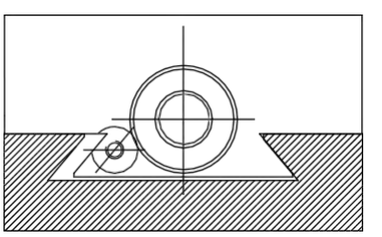

MOTORIC LINEAR SLIDE TYPE MOLS

p. 90

- Guided by profile rail guides
- Coefficient of friction 0.003
- Stick-slip free running
- minimal wear
- High load carrying capacity

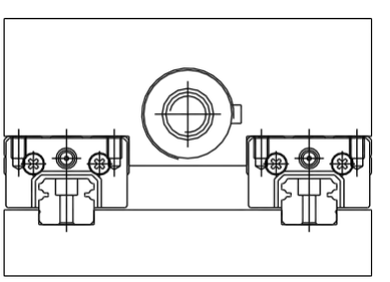

MFL & MML

p. 91-92

- Features on respective individual pages

GENERAL

Our motorized linear slides are used for all movement, machining and positioning tasks.

They can be used horizontally and vertically.
Our motorized linear slides are used in a wide variety of applications. These include, among others:

- Industrial automation
- Machine tools
- Packaging machines
- Special purpose machines
- Measuring devices
- Precision machines
- Tooling devices

5 axis unit
for laser positioning

NOTES

- Our motorized linear slides are low maintenance
- Cross table mounting is possible for slide guides
- Any axis combinations, e.g. 5-axis, are possible
- Can be combined with all other ERO products

CROSS TABLE MOUNTING FOR TYPE MOLS FOR LARGE STROKE

3-AXIS ASSEMBLY WITH DIFFERENT MOTORIZED LINEAR SLIDES

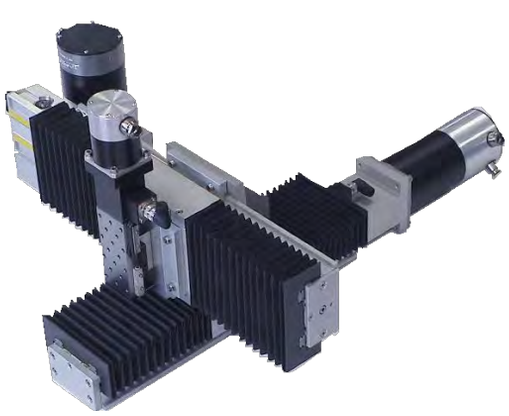

MOTORIC LINEAR STAGE
TYPE MOTS

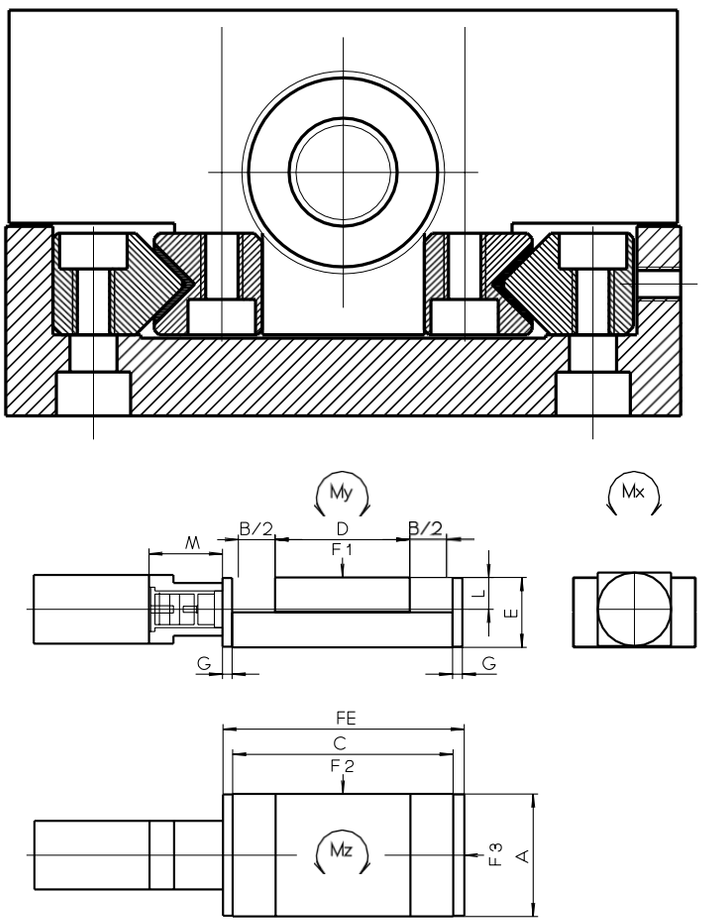

The tables are made of stress-relieved annealed strand hydraulic casting.
The recirculating ball screws have a lead accuracy of 0.05 mm over 300 mm.
The spindles are equipped with wipers.
The tables are characterized by very high load capacity. good damping and Robustness.

Other Versions:

- Structure as cross table and multi-axis system possible
- Special stroke lengths
- Interior part with T-slots
- Spindles with higher accuracy
- Attachment of other motors
- Covers

Systems complete with positioning controls matched to your application.

Load torques Mx. My and Mz on request.

MOTS

Size	A	B Stroke	C	D	E	FE	G	L	M	Spindle	dyn. Load capacity in N F1	F2	F3
100													
100.190.050		50	190			210							
100.260.100		100	260			280							
100.390.200	100	200	390	110	57	410	10	26	60	12 x 5	1290	645	2200
100.530.300		300	530			550							
150													
150.240.050		50	240			270							
150.310.100		100	310			340							
150.440.200	150	200	440	160	70	470	15	35	90	16 x 5	1935	968	9600
150.580.300		300	580			610							
200													
200.350.100		100	350			390							
200.490.200		200	490			530							
200.630.300	200	300	630	210	74	670	20	36	154	20 x 5	6000	4800	13900
200.770.400		400	770			810							
200.910.500		500	910			950							
300													
300.450.100		100	450			500							
300.590.200		200	590			640							
300.730.300		300	730			780							
300.870.400	300	400	870	310	90	920	25	44	154	20 x 5	9000	4500	13900
300.1010.500		500	1010			1060							
300.1150.600		600	1150			1200							
300.1290.700		700	1290			1340							

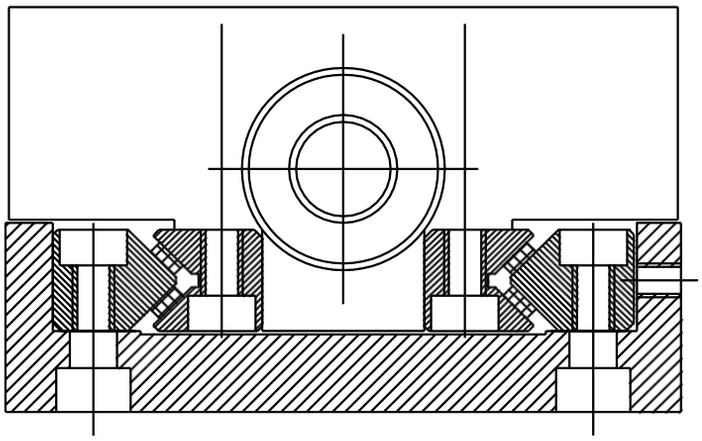

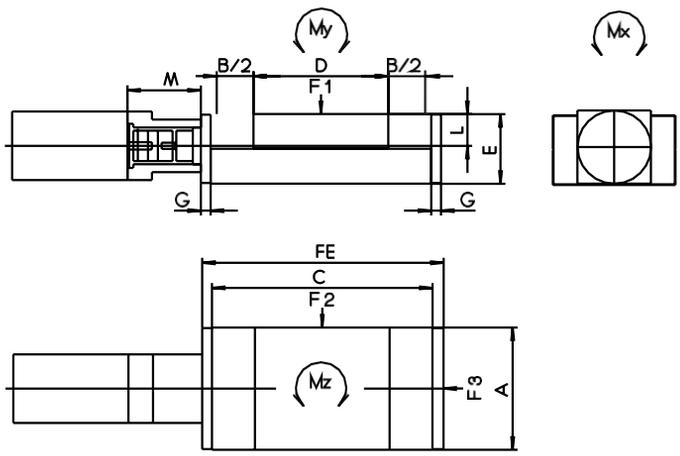

The tables are made of stress-relieved annealed strand hydraulic casting. The recirculating ball screws have a lead accuracy of 0.05 mm over 300 mm. The spindles are equipped with wipers. The tables are characterized by very high load capacity. good damping and robustness.

Other Versions:

- Structure as cross table and multi-axis system possible
- Special stroke lengths
- Interior part with T-slots
- Spindles with higher accuracy
- Attachment of other motors
- Covers

Systems complete with positioning controls matched to your application.
Load torques Mx. My and Mz on request.

MONO

Size	A	B Stroke	C	D	E	FE	G	L	M	Spindle	dyn. Load Capacity in N F1	F2	F3
100													
100.240.050		50	240	160		260					14156	7078	
100.360.100		100	360	210		380					16896	8448	
100.590.200	100	200	590	310	57	610	10	26	60	12 x 5	22833	11416	2200
100.830.300		300	830	410		850					28313	14156	
150													
150.240.050		50	240	160		270					14156	7078	
150.360.100		100	360	210		390					16896	8448	
150.590.200	150	200	590	310	70	620	15	35	90	16 x 5	22833	11416	9600
150.830.300		300	830	410		860					28313	14156	
200													
200.460.100		100	460	310		490					36666	18333	
200.690.200		200	690	410		730					44000	22000	
200.830.300	200	300	830	410	74	870	20	36	154	20 x 5	36666	18333	13900
200.970.400		400	970	410		1010					29333	14666	
200.1210.500		500	1210	510		1250					36666	18333	
300													
300.460.100		100	460	310		500					36666	18333	
300.690.200		200	690	410		740					44000	22000	
300.830.300		300	830	410		880					36666	18333	
300.970.400	300	400	970	410	90	1020	25	44	154	20 x 5	29333	14666	13900
300.1210.500		500	1210	510		1260					36666	18333	
300.1350.600		600	1350	510		1400					29333	14666	
300.1490.700		700	1490	510		1540					22000	11000	

MOTORIC LINEAR STAGE TYPE MOKS

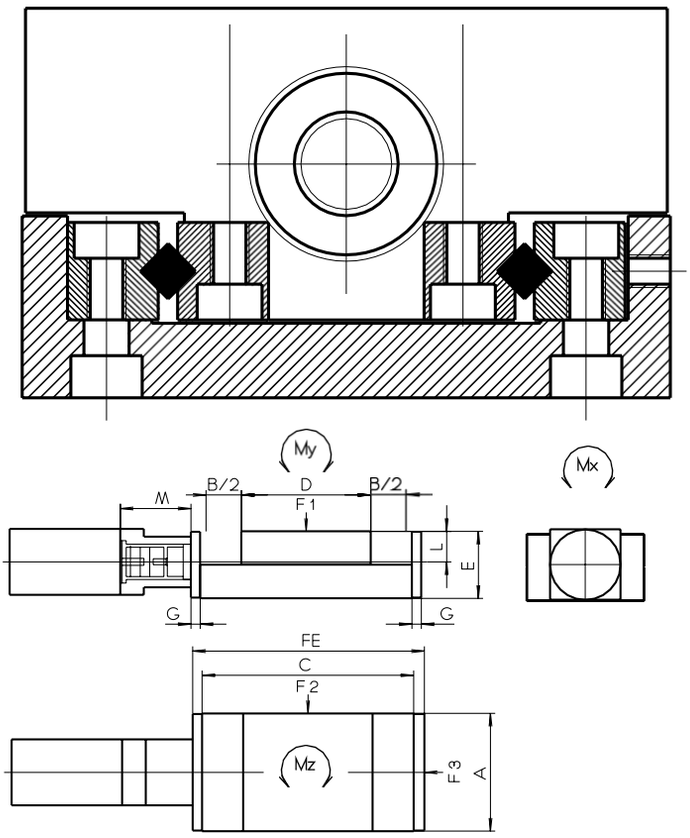

The tables are made of stress-relieved annealed strand hydraulic casting. The recirculating ball screws have a lead accuracy of 0.05 mm over 300 mm. The spindles are equipped with wipers.
The tables are characterized by very high load capacity. good damping and robustness.

Other Versions:

- Structure as cross table and multi-axis system possible
- Special stroke lengths
- Interior part with T-slots
- Spindles with higher accuracy
- Attachment of other motors
- Covers

Systems complete with positioning controls matched to your application.
Load torques Mx. My and Mz on request.

MOKS

Size	A	B Stroke	C	D	E	FE	G	L	M	Spindle	dyn. Load Capacityin N F1	F2	F3
100													
100.240.050		50	240	160		260					2473	1237	
100.360.100		100	360	210		380					3003	1501	
100.590.200	100	200	590	310	57	610	10	26	60	12 x 5	4063	2031	2200
100.830.300		300	830	410		850					5123	2561	
150													
150.240.050		50	240	160		270					2473	1236	
150.360.100		100	360	210		390					3003	1501	
150.590.200	150	200	590	310	70	620	15	35	90	16 x 5	4063	2031	9600
150.830.300		300	830	410		860					5123	2561	
200													
200.450.100		100	450	310		490					7367	3683	
200.690.200		200	690	410		730					9100	4550	
200.830.300	200	300	830	410	74	870	20	36	154	20 x 5	7366	3683	13900
200.970.400		400	970	410		1010					6066	3033	
200.1210.500		500	1210	510		1250					7366	3683	
300													
300.450.100		100	450	310		500					7366	3683	
300.690.200		200	690	410		740					9100	4550	
300.830.300		300	830	410		880					7366	3683	
300.970.400	300	400	970	410	90	1020	25	44	154	20 x 5	6066	3033	13900
300.1210.500		500	1210	510		1260					7366	3683	
300.1350.600		600	1350	510		1400					6066	3033	
300.1490.700		700	1490	510		1540					4333	2166	

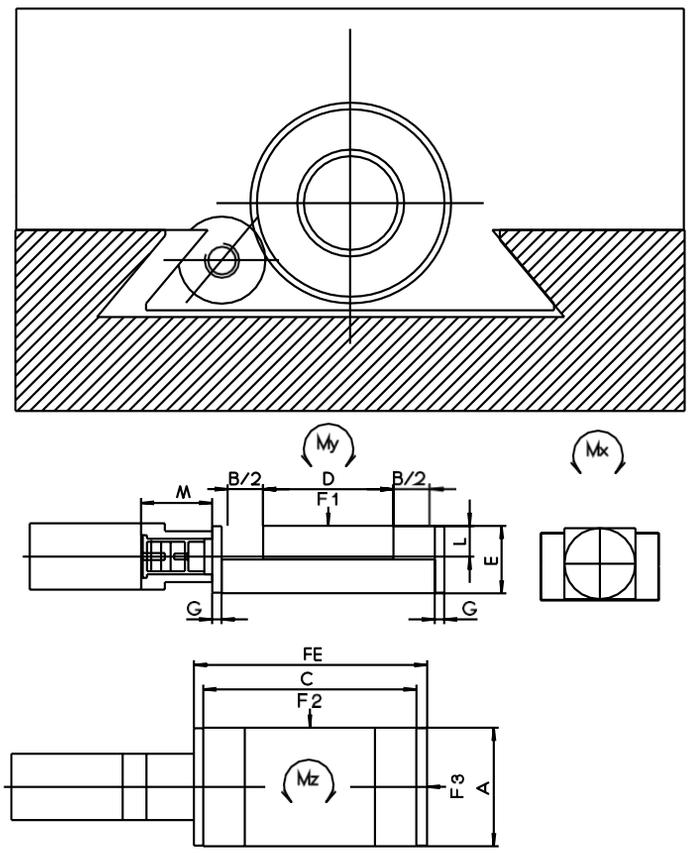

The tables are made of stress-relieved annealed strand hydraulic casting. The recirculating ball screws have a lead accuracy of 0.05 mm over 300 mm. The spindles are equipped with wipers. The tables are characterized by very high load capacity. good damping and robustness.

Other Versions:

- Structure as cross table and multi-axis system possible
- Special stroke lengths
- Interior parts with T-slots
- Spindles with higher accuracy
- Attachment of other motors
- Covers

Systems complete with positioning controls matched to your application.
Load torques Mx. My and Mz on request.

MOS

Size	A	B Stroke	C	D	E	FE	G	L	M	Spindle	dyn. Load Capacity in N F1	F2	F3
100													
100.190.050		50	190			210							
100.260.100		100	260			280							
100.390.200	100	200	390	110	57	410	10	26	60	12 x 5	2331	1666	2200
100.530.300		300	530			550							
150													
150.240.050		50	240			270							
150.310.100		100	310			340							
150.440.200	150	200	440	160	70	470	15	35	90	16 x 5	5218	2610	9600
150.580.300		300	580			610							
200													
200.350.100		100	350			390							
200.490.200		200	490			530							
200.630.300	200	300	630	210	74	670	20	36	154	20 x 5	7415	3708	13900
200.770.400		400	770			810							
200.910.500		500	910			950							
300													
300.450.100		100	450			500							
300.590.200		200	590			640							
300.730.300		300	730			780							
300.870.400	300	400	870	310	90	920	25	44	154	20 x 5	14927	7464	13900
300.1010.500		500	1010			1060							
300.1150.600		600	1150			1200							
300.1290.700		700	1290			1340							

MOTORIC LINEAR STAGE
TYPE MOLS

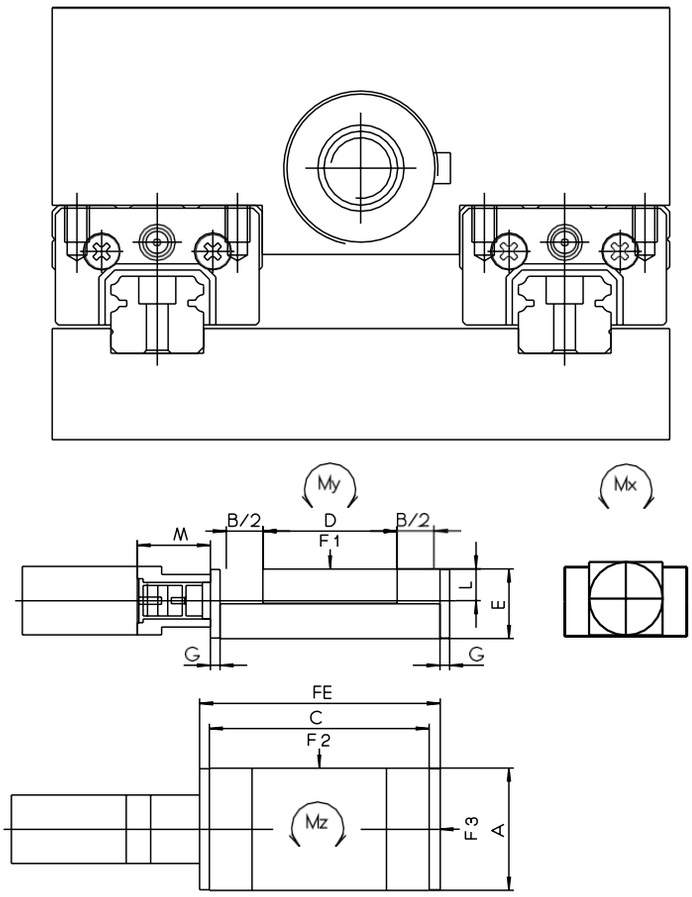

The tables are made of stress-relieved annealed strand hydraulic casting. The recirculating ball screws have a lead accuracy of 0.05 mm over 300 mm. The spindles are equipped with wipers.
The tables are characterized by very high load capacity. good damping and robustness.

Other Versions:

- Structure as cross table and multi-axis system possible
- Special stroke lengths
- Interior parts with T-slots
- Spindles with higher accuracy
- Attachment of other motors
- Covers

Systems complete with positioning controls matched to your application.
Load torques Mx. My and Mz on request.

MOLS

Size	A	B Stroke	C	D	E	FE	G	L	M	Spindle	dyn. Load Capacity in N F1	F2	F3
100													
100.190.050		50	190			210							
100.260.100		100	260			280							
100.390.200	100	200	390	110	70	410	10	26	60	12 x 5	15660	7830	2200
100.530.300		300	530			550							
150													
150.240.050		50	240			270							
150.310.100		100	310			340							
150.440.200	150	200	440	160	70	470	15	35	90	16 x 5	20620	10310	9600
150.580.300		300	580			610							
200													
200.350.100		100	350			390							
200.490.200		200	490			530							
200.630.300	200	300	630	210	74	670	20	36	154	20 x 5	32540	16270	13600
200.770.400		400	770			810							
200.910.500		500	910			950							
300													
300.450.100		100	450			500							
300.590.200		200	590			640							
300.730.300		300	730			780							
300.870.400	300	400	870	310	90	920	25	44	154	20 x 5	32540	16270	13600
300.1010.500		500	1010			1060							
300.1150.600		600	1150			1200							
300.1290.700		700	1290			1340							

TECHNICHAL DATA

- Widths: 30-50-75-100 mm
- Heights: 20-22-26-33 mm
- Stroke: 25 - 300 mm
- Slide parts made of anodised aluminium
- Sequence accuracy: <0.01/100 mm
- Repeat accuracy: 0.01
- High load capacity
- Recirculating ball bearing guides
- 2-phase stepper motor

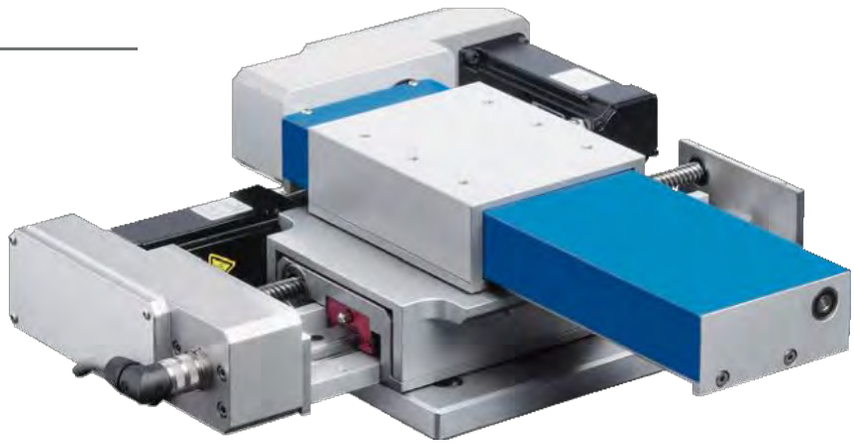

MFL 100.255.075
here mounted as cross table with
U-sheet cover

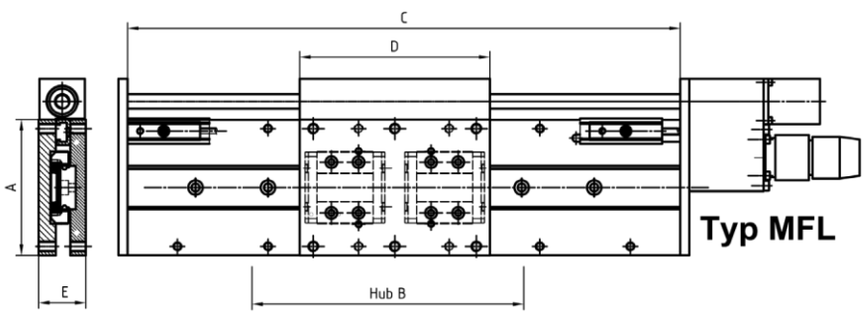

Please note:
Feed forces and
positioning accuracy
are also dependent on the control
components, the stepper motors and
the adjacent construction

Size	Width A	Length C	Stroke B	D	E	Spindle	Load Capacity Spindle [N]	Load Capacity bearing [N]
30								
30.130.025		130	25					
30.155.050		155	50					
30.180.075		180	75					
30.205.100		205	100					
30.255.150	30	255	150	75	20	KGT 6 x 1	310	1300
30.305.200		305	200					
30.355.250		355	250					
30.405.300		405	300					
50								
50.165.025		165	25					
50.190.050		190	50					
50.215.075		215	75					
50.240.100		240	100					
50.290.150	50	290	150	85	22	KGT 6 x 1	310	2500
50.340.200		340	200					
50.390.250		390	250					
50.440.300		440	300					
75								
75.180.025		180	25					
75.205.050		205	50					
75.230.075		230	75					
75.255.100		255	100					
75.305.150	75	305	150	105	26	KGT 8 x 1	700	3600
75.355.200		355	200					
75.405.250		405	250					
75.455.300		455	300					
100								
100.205.025		205	25					
100.230.050		230	50					
100.255.075		255	75					
100.280.100		280	100					
100.330.150	100	330	150	130	33	KGT 8 x 1	700	6300
100.380.200		380	200					
100.430.250		430	250					
100.480.300		480	300					

TECHNICAL DATA

- Versions: Ball screw, Linear motor, Eccentric disc
- Width: 30
- Height: 15 mm
- Stroke: 25 - 50 mm
- Traversing speed: 8 mm/s
- Slide parts made of anodised aluminium
- Repeat accuracy: <0.01 mm

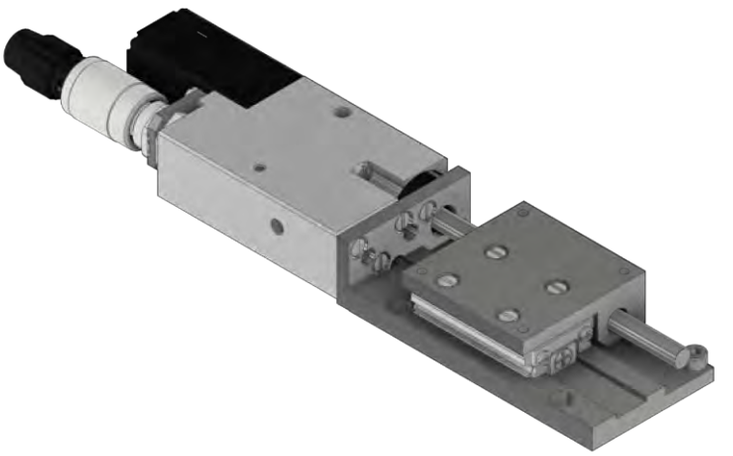

With the new motorised miniature carriage guide, new applications for short-stroke positioning and handling tasks are possible. The different versions cover a wide range of required tasks:

- For example, high repeat accuracy can be covered with the spindle-driven version.
- With the linear motor version, the priority is on fast and precise movements.
- The third version of the MML series is completed by the eccentric version.

  completed. It brings its advantages to the fastest positioning tasks and is ideally suited for oscillating movements.

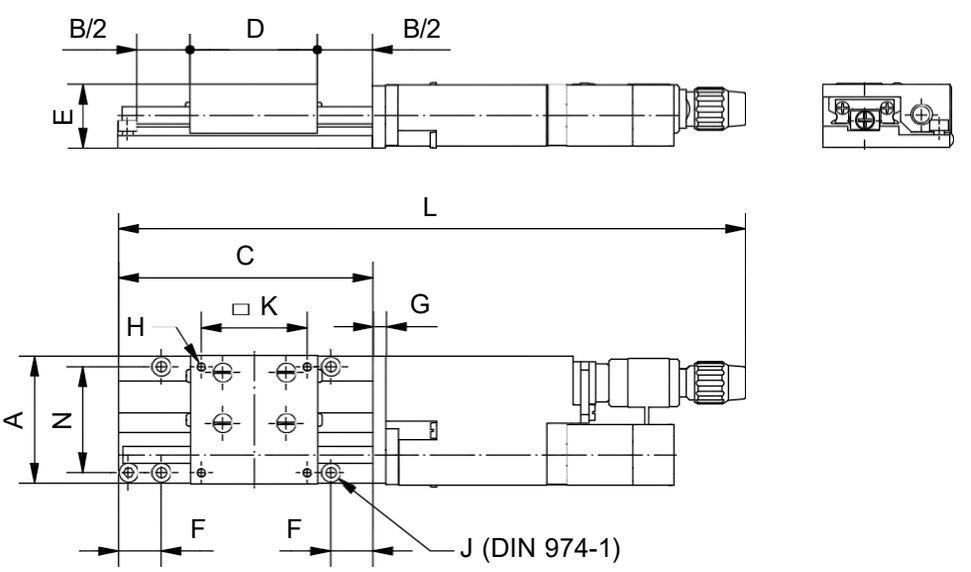

Type		A Width	C Length IT	B Stroke	D Length AT	G	E Height	L	F	H	K	N	J	Weight (kg)
30														
	30.060.025		60	25	30			148			25			0.22
MML	30.090.040	30	90	40	45	3	15	178	10	M2	40	25	M2	0.27
	30.115.050		115	50	60			203			55			0.32

For more information, please visit our website at
www.ero-fuehrungen.de or contact us directly at vertrieb@ero-fuehrungen.de at

We can customize all motorised slides individually according to customer requirements.
Also larger slide units and motorized goniometer tables, rotary tables.
toothed belt and ball bushing guides are possible.
Due to our own development, we can customise every slide.

ERO GETS IDEAS MOVING

Whoever needs good quality at economic costs for handling units and automation in the food industry, in clean rooms, in mechanical engineering, in the automotive industry, in the optical industry and many more should use assemblies and parts that have already been standardised by specialists.

The advantages of the linear unit ERO Speed 2000 Z shown here lie in the extruded aluminium profile and the resulting high torsional stiffness and bending strength, which allow extreme moment loads.

This ensures a long service life.

The sliding inductive precision limit switches integrated in the base body are protected against overrun by mechanical damping elements and are guided to a central plug.

Integrated toothed belts allow a completely enclosed design. The high acceleration is made possible by a reduced external mass moment of inertia.

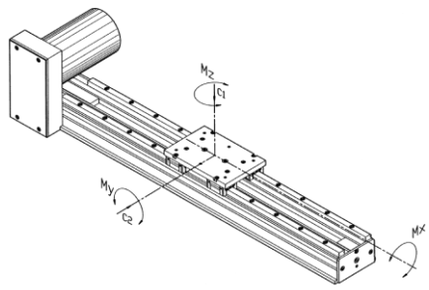

EXTRUDED ALUMINIUM PROFILE

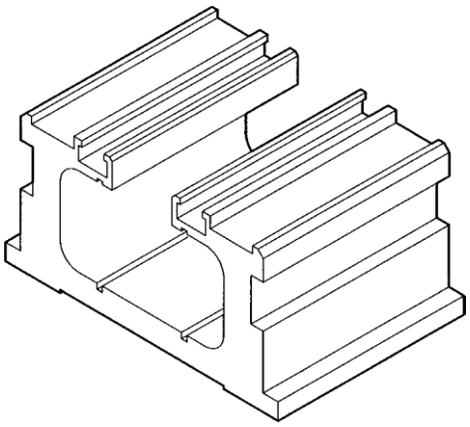

To fulfil the enormous requirements that the field of the field of handling and automation technology, the toothed belt and spindle driven linear units ERO Speed 2000 and ERO Speed 3000 were developed.

Thanks to the principle of the modular system, the use of the linear axes is , from simple combination to the multi-coordinate system, cost-effective and universal.

X-UNIT

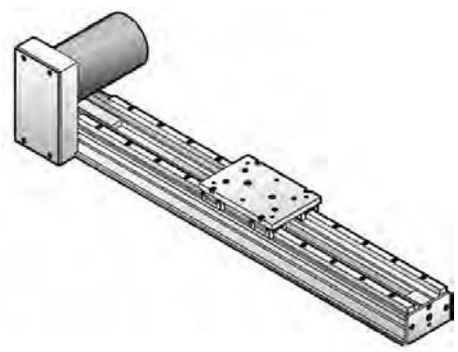

X-Y-Z-UNIT

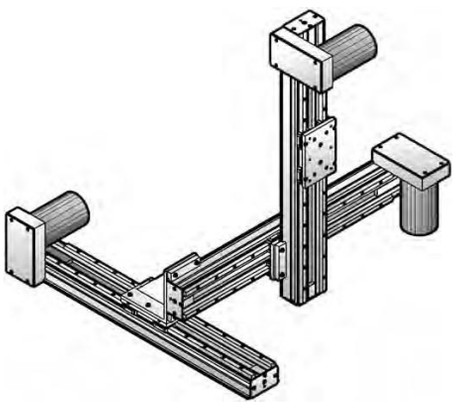

X-Y-UNIT

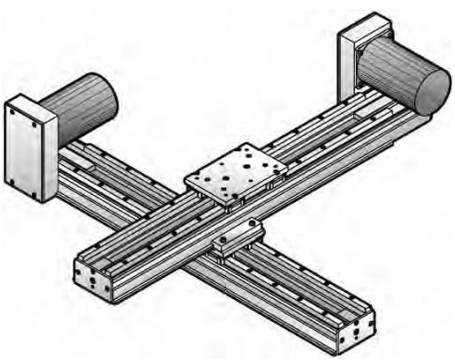

X-Y-Z 1-UNIT

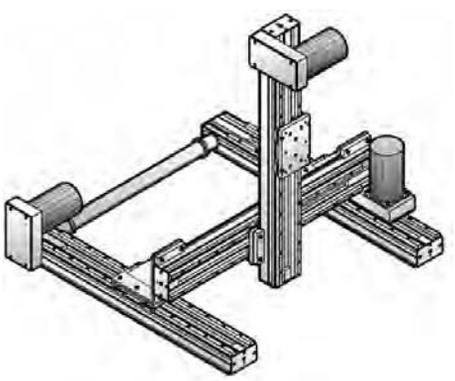

X-Y-Z 2-UNIT

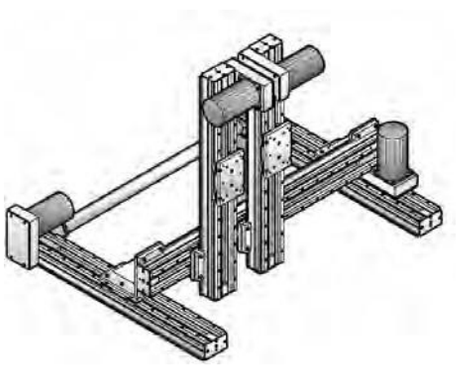

TECHNICHAL DATA ERO SPEED 2000

Versions	Ball screw drive. Toothed belt drive
Material	Extruded aluminium profile. Aluminium carriage optionally available in steel
Width	100 mm
Height	82 mm
Strokes Ball screw drive	100 - 1000 mm (bellows) 100 - 1500 mm (sheet metal cover. belt cover) stroke distances each 100 mm (standard) others on request
Strokes Toothed belt drive	100 - 3000 mm (all covers) Stroke distances per 100 mm (standard) others on request
Repeat accuracy	+/- 0.01 mm (ball screw) +/- 0.04 mm (toothed belt drive)
Guide type	Recirculating ball bearing guide
Sealing	Without cover. Bellows cover. Cover strip. Cover plate
Mounting holes	Drilling pattern (standard). optionally with customer drilling pattern or without
Special versions	On request

Calculation of dimension A and dimension B				
Version	Dimension A	Dimension B	Dimension C	Dimension D = Motor flange
Ball screw drive	Stroke + 200 mm	Stroke + 220 mm	35 mm	90 mm
Toothed belt drive	Stroke + 172 mm	Stroke + 270 mm	15 mm	105 mm

Calculation does not apply to bellows cover.
Please refer to our website for this calculation.

ERO-Speed 2000 SB
Ball screw
and belt cover

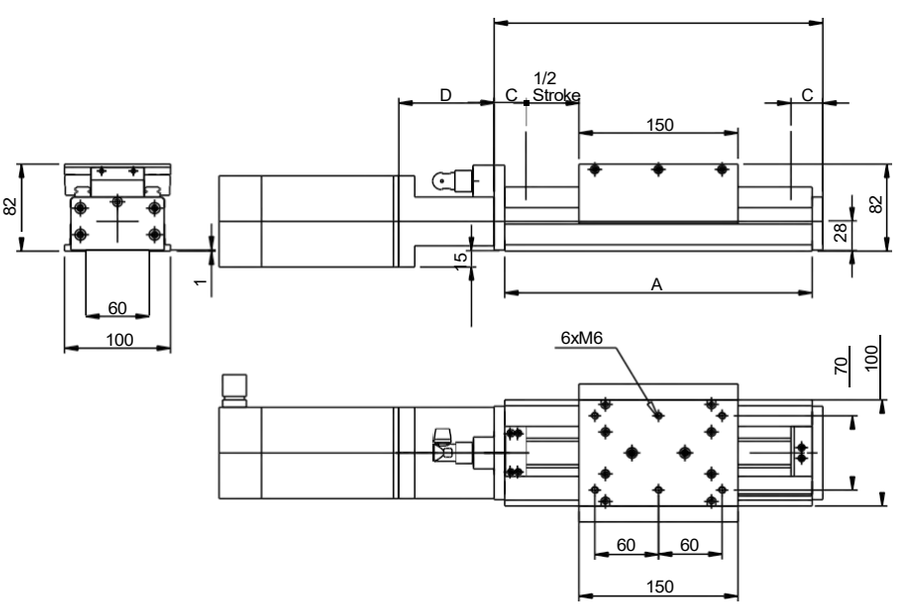

ERO-Speed 2000 ZF
Toothed belt drive and bellows cover

For further information please visit our website at
https://ero-fuehrungen.de/en/products/linear-axes/ero-speed-2000

TECHNICAL DATA ERO SPEED 3000

Versions	Ball screw drive. Toothed belt drive. Linear motor
Material	Extruded aluminium profile. Aluminium carriage optionally available in steel
Width carriage plate / profile	200 mm / 230 mm
Height	140mm
Strokes	100 - 2000 mm Stroke distances each 100 mm (standard) others on request
Repeat accuracy	+/- 0.01 mm (ball screw drive) +/- 0.04 mm (toothed belt drive) +/- 0.01 mm (linear motor drive)
Guide type	Recirculating ball bearing guide
Sealing	Without cover. Bellows cover. Cover strip. Cover plate
Mounting holes	Drilling pattern (standard). optionally with customer drilling pattern or without
special versions	On request

Calculation of dimension A and dimension B		
Version	Dimension A	Dimension B
Ball screw drive	Stroke + 100 mm + Trolley length	Stroke + 140 mm + Carriage plate
Toothed belt drive	Stroke + 100 mm + Trolley length	Stroke + 222.5 mm + Carriage plate
Linear motor	Stroke + 100 mm + Trolley length	Stroke + 140 mm + Carriage plate

Trolley length = 350 mm
Calculation does not apply to bellows cover.
Please refer to our website for this calculation.

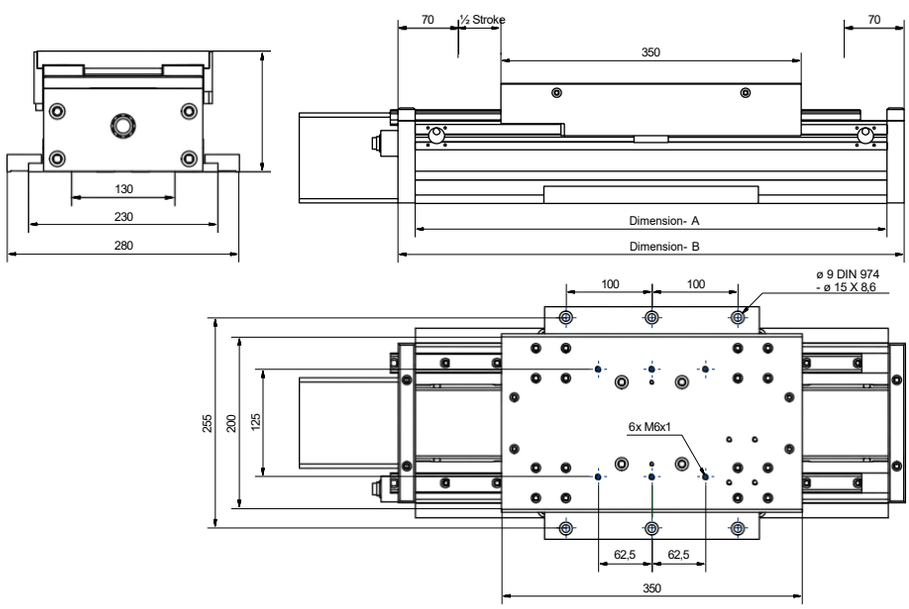

ERO-Speed 3000 SB
Ball screw drive
and Belt cover

ERO-Speed 3000 SB
Ball screw and sheet metal cover

For more information, please visit our website at
https://ero-fuehrungen.de/en/products/linear-axes/ero-speed-3000/

LINEAR MODULE

ERO linear modules for every application. Easy to handle and 100% backlash-free. Also available with servo or stepper motor on request.

Advantages:

- 100 % zero backlash due to preloaded cross roller guides
- Very high rigidity - even with long strokes
- All mounting surfaces are CNC machined

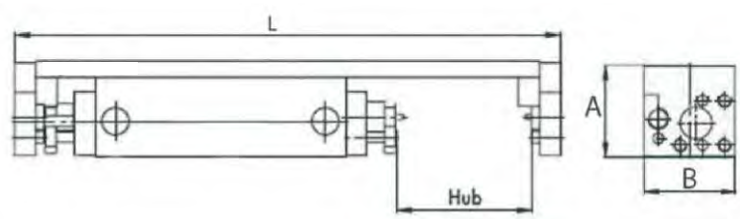

LINEARMODUL LM35

Stroke	13 - 100 mm
Operating pressure	3 - 7 bar
Piston diameter	12 mm
Rod diameter	4 mm
Load capacity	max. 450 N
Cylinder force at 6 bar	Pre-stroke 68 N
	Return stroke 51 N

Type	Stroke [mm]	Weight [kg]	L	A	B
LM35-H013	13	0.54	153	36	35
LM35-H025	25	0.54	153	36	35
LM35-H038	38	0.68	203	36	35
LM35-H050	50	0.68	203	36	35
LM35-H063	63	0.82	253	36	35
LM35-H075	75	0.82	253	36	35
LM35-H088	88	0.96	303	36	35
LM35-H100	100	0.96	303	36	35

LINEARMODUL LM49

Stroke	13 - 175 mm
Operating pressure	3 - 7 bar
Piston diameter	16 mm
Rod diameter	6 mm
Load capacity	max. 2100 N
Cylinder force at 6 bar	Pre-stroke 115 N
	Return stroke 100 N

Type	Stroke [mm]	Weight [kg]	L	A	B
LM49-H013	13	1.12	170	49	49
LM49-H025	25	1.12	170	49	49
LM49-H038	38	1.33	220	49	49
LM49-H050	50	1.33	220	49	49
LM49-H063	63	1.55	270	49	49
LM49-H075	75	1.55	270	49	49
LM49-H088	88	1.78	320	49	49
LM49-H100	100	1.78	320	49	49
LM49-H113	113	2.00	370	49	49
LM49-H125	125	2.00	370	49	49
LM49-H150	150	2.45	470	49	49
LM49-H175	175	2.45	470	49	49

LINEARMODUL LM70

Stroke	25 - 300 mm
Operating pressure	3 - 7 bar
Piston diameter	32 mm
Rod diameter	12 mm
Load capacity	max. 6000 N
Cylinder force at 6 bar	Pre-stroke 470 N
	Return stroke 404 N

Type	Stroke [mm]	Weight [kg]	L	A	B
LM70-H025	25	3.45	248	70	70
LM70-H050	50	3.45	248	70	70
LM70-H075	75	4.40	348	70	70
LM70-H100	100	4.40	348	70	70
LM70-H125	125	5.35	448	70	70
LM70-H150	150	5.35	448	70	70
LM70-H175	175	6.30	548	70	70
LM70-H200	200	6.30	548	70	70
LM70-H250	250	8.20	748	70	70
LM70-H275	275	8.20	748	70	70
LM70-H300	300	8.20	748	70	70

WE SUPPORT YOU IN YOUR PROJECTS
WITH OUR KNOW-HOW AND PRODUCTS, FOR…

- Guide Rails

- Linear Slides (mechanical and motorized)

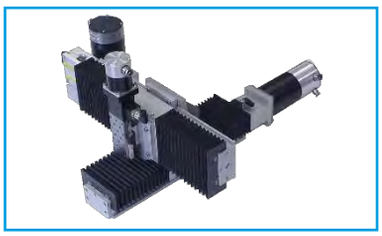

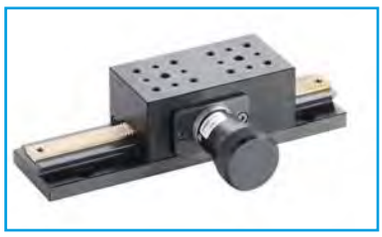
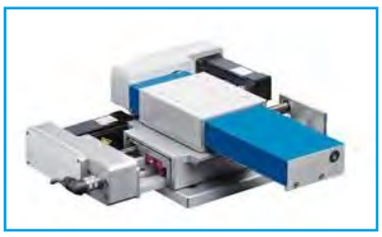
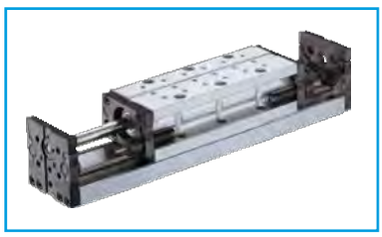
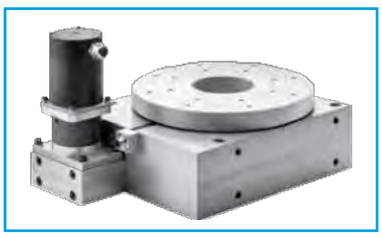

Complete Machines and Systems

5-Axis unit

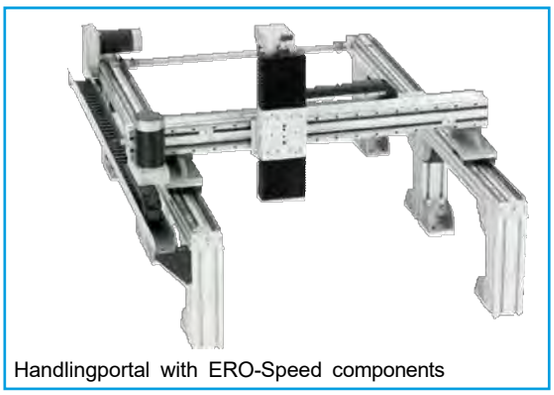

Handlingportal with ERO-Speed components

5-Axis scanner

Laser welding system

Services

Retrofit of old dressing machines

This is only a small selection of our competencies. Would you like more information?
Please contact us at vertrieb@ero-fuehrungen.de or call +49 7707 158-0.

FÜHRUNGEN

ERO-Führungen GmbH
Erich Rothweiler & Söhne

Weißkreuzstraße 16
79843 Löffingen-Unadingen GERMANY

+49 7707 158-0

info@ero-fuehrungen.de

www.ero-fuehrungen.de